减速机样本

Complete gearbox catalog

编者说明 Editorial

高强度、高精度。
良好的合作伙伴关系。

我们始终致力于能够以有限的零件系列组合出近乎无穷多的减速机类型，并希望这一过程能够足够简便。

Impress with power and precision.
Inspire with partnership.

“We are fascinated by the way in which a modest number of parts can be used to build a seemingly infinite number of gearbox variants, all the while making it appear like it’s quite simple.

Bernd Neugart
执行董事
Managing Partner

Thomas Herr
执行董事
Managing Partner

这可以通过我们对应用需求的理解、发挥减速机模块的智能性并借助个性化研发在短期内制定完美解决方案来实现。

我们的减速机不断完善。
坚实可靠！始终如一！信守承诺！

We achieve this because we understand the application, exploit the intelligence of our modular gearbox system and develop custom solutions within just a short time.

Our gearboxes deliver the power you need:
Reliably. Lifelong. And that’s a promise.”

编者说明 Editorial

超强动力，高精度以及良好的合作伙伴关系是本公司90多年来始终贯彻执行的经营理念。

我们提供的产品系列包括许多创新的成熟技术和可信赖的减速机解决方案。
目前，我们针对经济型与精密型应用为您提供18个不同的减速机系列，另外针对特定应用领域提供两个高精度减速机系列。

作为您技术上的合作伙伴，我们也会提供定制的解决方案；专业的客户定制减速机。

如果您对我们的产品和服务有任何的问题，请及时与我们联系，我们将竭诚为您服务。

Power, precision and partnership – these values characterize our business philosophy and our work, and have for over 90 years.

Our offered product range includes numerous innovative, technologically mature, and highly reliable gearbox solutions. We now offer 18 different gearbox series for the economy and precision sectors, as well as two additional planetary gearbox series for specific application areas.

As a technology partner, we also provide customized solutions; specialized, custom designed gearboxes.

Please contact us with any questions about our products or services – we appreciate every opportunity to assist and meet your automation, precise motion and power transmission requirements.

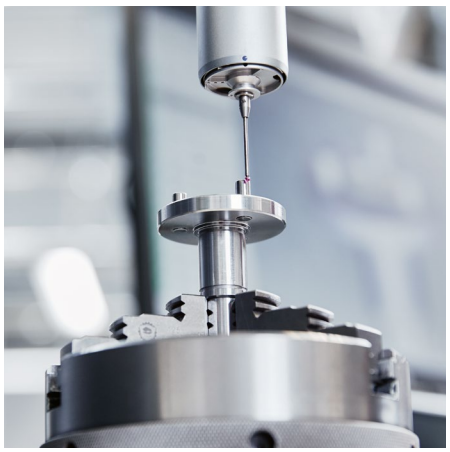

目录 Table of contents

创新并且独特：
定制减速机

坚固的结构设计及高性能、特殊的结构需求。食品级的认证和独特的设计：本公司可以满足客户在机械领域中的各种复杂要求。

高素质的技术工程师设计减速机系统并解决减速机各种问题。
服务、成本和质量恰到好处。
创新优势：本公司将长期的专业经验以及不断的研发成果运用到客户解决办法中。

在个性化驱动解决方案的早期研发阶段，与客户的紧密合作对我们来说非常重要。我们将围绕您的特种减速机提供现场咨询和最佳服务。

Innovative and individual:
Our custom made gearboxes.

Compact form and high performance, special construction requirements, food grade certification or individual design: We fulfill even your most complex requirements – in all sectors of machine building.

The qualified specialists of our engineering department design gearbox solutions and systems. According to your performance, price and quality needs.
Your benefit from innovation: We utilize our experience and at the same time take advantage of new developments, integrating them into our customer solutions.

Close collaboration with our customers is important to us even in the earliest development phases of individual drive solutions. We believe in providing on-site advice and optimal service in relation to every aspect of your custom made gearbox.

高质量的产品。

顾客满意是本公司的终极目标，产品质量和服务是我们的首要任务。
本公司的质量-环保理念保证并保持了我们在国际市场上不断地取得巨大成功。

本公司在产品质量、技术支持和服务上的高标准要求得到了国际认可：在全世界所有重要的工业国家中我们拥有超过70家代理和分支机构。

本公司只在德国进行产品制造。在美国和中国的组装厂可以满足不同地区的需求并保证供货时间和货物调度的灵活性。

Power at a high level: Our quality.

Your satisfaction is our measuring stick – that's why the quality of our products and services is always our top priority.
With our quality and environmental policies we secure and expand our economic success throughout international markets.

Our high standard in product quality, support and service is appreciated internationally: With over 70 representatives and branches, we are represented in all major industrial nations.

We manufacture our products exclusively in Germany.
In the USA and China, our assembly factories serve regional markets, guaranteeing a high level of flexibility for adaptations as well as the shortest delivery times.

性能强劲，操作直观:
Neugart 计算程序 – **NCP**

使用 Neugart 计算程序 (NCP 4.2)，您可简单几步实现最佳的电机与减速机组合。这样一来，您的应用将变得节省成本和节能高效。在后台会有一款复杂的软件对您整个传动系统的所有参数进行计算。这款工具的操作很简单：NCP 的用户界面经过明确的分区，结构简洁，操作直观。

通过 NCP，您可查询到市场上几乎所有常见的电机和各种应用，如齿轮齿条、滚珠丝杆、皮带、输送带、转盘、曲轴和复卷机构每个阶段都有动态数据和负载的图示。您便可实时关注所使用的组件是否合适。

优点概要:

- 尺寸结构一目了然 – 一眼便可获知输入值和输出值
- 免费供 Neugart 客户或感兴趣者使用
- 离线模式 – 离线也能进行设计
- 包括 18,000 余种电机的庞大电机数据库
- 经过对所有输入数值进行可靠性测试，能够确保安全性
- 所有计算步骤都能使用全面的技术文档
- 提供多种语言版本 – 输出时有七种语言可选
- 可直接在线访问所选产品的数据页和 CAD 文件

Neugart 公司将定期提供 NCP 培训
请联系：**training@neugart.com**

Powerful and intuitive interface:
Neugart Calculation Program – NCP

The Neugart Calculation Program (NCP 4.2) lets you assemble the optimal motor and gearbox combination with just a few clicks. Your application therefore becomes cost and energy efficient. In the background, a complex software routine calculates all parameters for your whole drive train. Despite this complex process, the tool is easy to use: The NCP user interface presents a clear intuitive structure.

NCP gives you access to virtually all of the conventional motors on the market and a large number of applications like pinions, spindles, belts, conveyors, rotary tables, slider cranks, and winders. Dynamics and load data are depicted as graphs in each stage. You can then see in real time whether the components you have selected are suitable or not.

Your benefits at a glance:

- Transparent dimensioning – input and output values at a glance
- Free of charge for you (as a Neugart customer or prospective)
- Offline mode – design without internet access
- Extensive database containing over 18,000 motors
- Reliability based on plausibility checks of all entered values
- Extensive technical documentation for all calculating steps
- Multilingual support – seven different languages to choose from
- Online access to dimension sheets and CAD files for the selected products

Neugart offers NCP training courses at regular intervals.
Please contact us at **training@neugart.com**

最新在线服务，新的选择：
Tec Data Finder – TDF

仅需几步操作，Tec Data Finder (TDF) 便可为您生成减速机的所有相关信息。其中包括呈现在尺寸图中的特定技术和几何数据，以及所有常见格式的 CAD 模型。

同时，减速机的几何形状可直接在特定的电机上进行调整和调试。这需要借助全面的电机数据库或者输入对应的连接尺寸。除此之外，无需预选特定的电机便可从尺寸图和 CAD 数据库中直接下载减速机数据。

New online services, new options:
Tec Data Finder – TDF

With just a few clicks, the Tec Data Finder (TDF) generates all of the information relevant to your gearbox. This includes the specific technical and geometrical data in the form of a dimension sheet as well as the CAD models in all of the usual formats.

At the same time, the gearbox geometry can be adapted and tuned directly to your specific motor. This is based on a comprehensive motor database or on manual entries of individual connection measurements. In addition, the gearbox data can also be downloaded directly from the dimension sheet and CAD database without the advance selection of a specific motor.

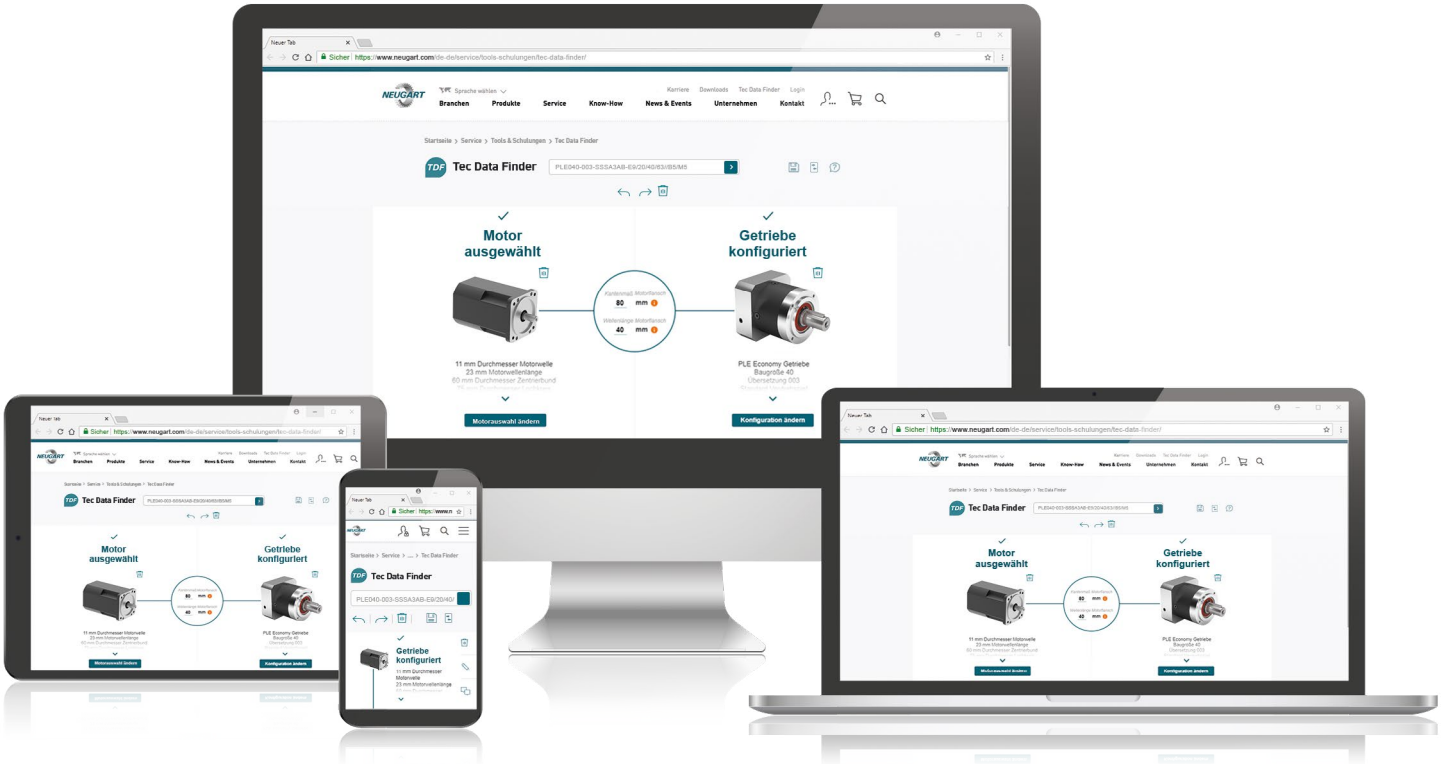

优点概要:

- 免费的在线工具
- 全面的电机数据库（超过 20,000 种电机）
- 电机-减速机法兰-几何形状的可信度测试
- 用户账号—访问更快速
- 购物车—快速的报价查询 和 CAD 数据
- 配置启动—从电机或减速机开始
- 对比列表（多达5台减速机）
- 所有信息均有七种不同语言可选

Your benefits at a glance:

- Free online tool
- Comprehensive motor database (over 20,000 motors)
- Plausibility check on motor and gearbox flange geometries
- User account – for even faster access
- Request cart – for fast quote requests and CAD data
- Configuration start – begin with motor or gearbox
- Comparison list (up to 5 gearboxes)
- Information can be output in seven different languages

如欲了解有关 NCP和TDF工具的信息，请访问：
www.neugart.com

The NCP and TDF tools can be found on our website:
www.neugart.com

注重细节，打造完美：
公司产品和我们的服务.

公司提供各种服务项目-通过Neugart官网NCP和TDF工具，您可以进行尺寸图和产品搜索，为您提供标准的减速机选型参数。

公司在各个国家都设有分公司。公司的信息网络以及所使用的经营软件不但可以保证各个分公司可以顺利地进行通讯往来，并提供最佳的合作经营流程。

性能强，效率高且技术创新：我公司保证在减速机技术方面为您提供先进的解决方案，以及质量高，经济性的产品。

Perfection in every detail:
Our products and our service.

We support you with a wide range of services – from NCP, our free calculation tool, to the Neugart dimension sheet and product finders to our integrated, certified claims management.

We are represented in all major markets with local companies. Our internal information network and the business software we use ensure smooth internal communication and optimally coordinated business processes.

Powerful, efficient and innovative: We create forward-looking solutions in gearbox technology – high quality at reasonable prices.

另一项决策：
Neugart – 最佳选择.

几十年来，Neugart始终利用高科技和创新技术，持续研发以及高精密的制造技术获得了全世界客户的信赖。

我公司在精密加工减速机，特殊减速机制造以及按照客户要求生产齿轮部件方面积累了丰富的经验和技术，产品在国内和国际市场上供不应求。

凭借高效率-德国制造：您可以在公司系列产品中找到您需要的产品。

当然，公司还有很多的优点值得您选择Neugart产品。

Decidedly different:
Neugart – for good reason.

Neugart distinguishes itself with advanced, innovative technology, with high-precision production technology and has been doing so for decades. Worldwide, renowned customers put their trust in our vast experience.

Our precise planetary gearboxes and our experience in the construction of custom made gearboxes are highly sought after in national and international markets.

Put your trust in the highest level of performance – Made in Germany: In our well-balanced portfolio you will find the right product for your needs.

We can provide you with good reasons to make a decision for Neugart now.

我们是您在行星减速机领域的专家伙伴

我们是您在行星减速机领域的专家伙伴。半个世纪以来，Neugart 一直是行星减速机领域中可靠、强大且创新不断的研发团队和制造商。无论客户的需求多么复杂，我们的产品都能胜任。所以，我们逐渐成为了名副其实的驱动技术专家。我们的行业实力达到了客户在需要寻求创新解决方案时总会前来向我们咨询的程度。

直至今日，我们的产品项目实现了战略扩展和延伸，如今我们已经能够为所有应用情况提供解决方案。作为一家所有者领导型家族企业，保持可靠的形象和站在客户的角度行事对我们而言至关重要。

因此，我们始终致力于为每一个新项目设计出实际可行的解决方案。无论最终面临何种应用情况，我们都能够在许多领域如鱼得水，在需要的时间地点带去我们的专业知识和技能诀窍。其中包括：机械和基础建设的很多领域、自动化/机器人这类专业细分市场、食品和包装行业、药品技术和医药等敏感领域以及工具或印刷机制造行业。下面是我们专业能力的概况。如果您有任何问题，请随时联系我们。

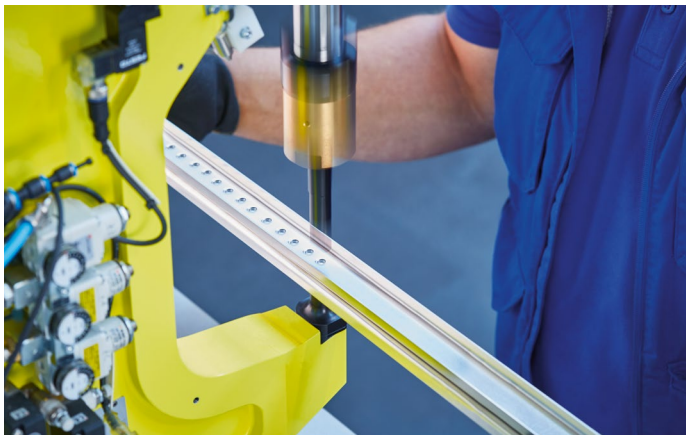

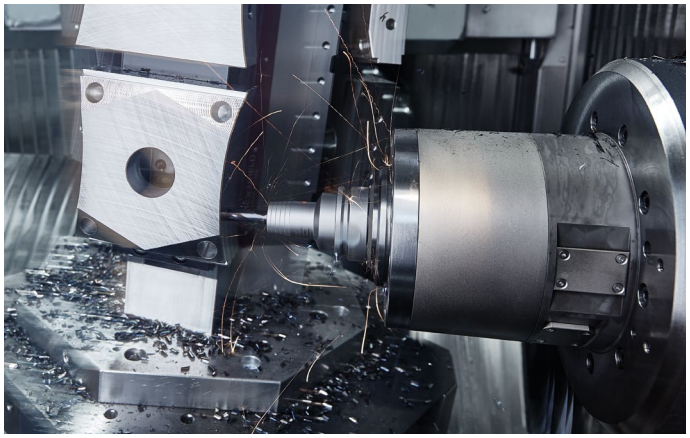

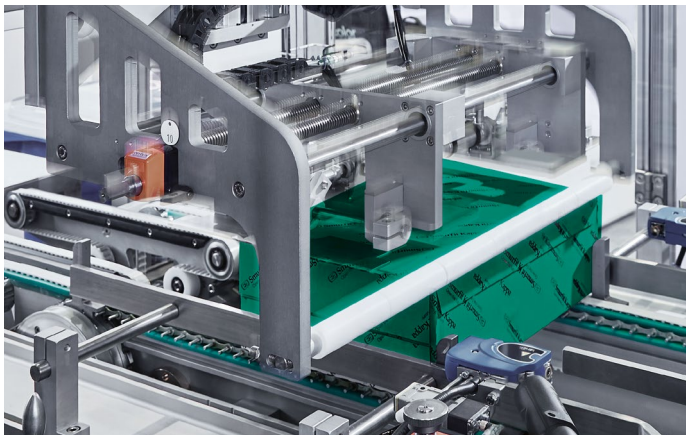

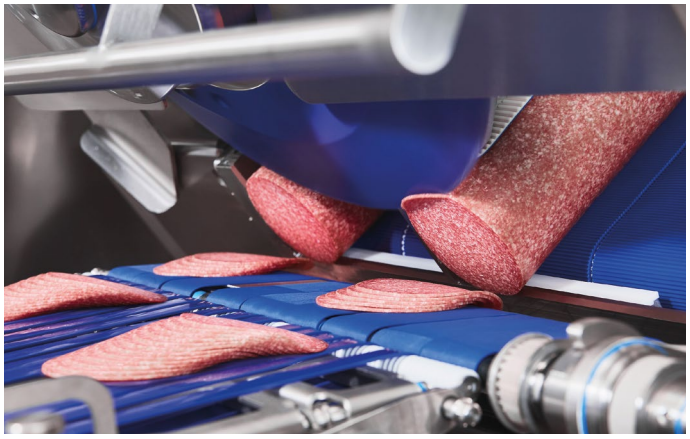

We are your specialist in planetary gearboxes.

As a reliable, trusted and innovative planetary gearbox manufacturer, Neugart has been supporting all industrial sectors for over half a century. Our products get the job done, regardless of how complex our customers' needs may be. Over the years, we have become the foremost leaders in drive technology specialization. Our vast industry knowledge allows us to support customers with their most challenging projects and to offer the latest technologies and solutions.

Our constantly expanding product inventory provides effective solutions for virtually every application of gearbox technology.

Our customers' challenges and concerns are always at the forefront of our thoughts. Listening to and reflecting upon problems helps us to expand our knowledge, in order to achieve the highest standard in design and innovation. Our mechanical and industrial expertise includes everything from automation and robotics to food and packaging to medical and pharmaceutical.

Neugart 减速机品质卓越。

通过优化产品技术和服务，为众多行业的发展提供了绝佳的机遇。
欢迎使用我们的产品，相信您将受益匪浅！

Neugart gearboxes are world-class products.

Unique possibilities are available for countless industries as we continuously optimize all technologies and services related to our products. We invite you to benefit from our competitive advantages.

自动化/机器人

- 经济型减速机解决方案
- 在驱动领域积累了丰富的经验

Automation and robotics

- Cost-effective gearbox solutions
- Smart software for all product aspects

包装设备

- 减速机灵活耐用
- 经济型减速机解决方案

Packaging machines

- Dynamic and hardwearing gearboxes
- Cost-effective gearbox solutions

机床

- 丰富的应用经验
- 减速机运行可靠且使用寿命极长

Machine tools

- Extensive application experience
- Reliable and long-lasting gearboxes

食品行业

- 经过认证的卫生设计
- 全面的应用知识

Food and beverage industry

- Certified products
- Worldwide, comprehensive application knowledge

药品技术和药剂行业

- 在驱动领域积累了丰富的经验
- 经过认证的卫生设计

Medical engineering and pharmaceuticals

- Smart software for all product aspects
- Certified products

印刷行业

- 丰富的应用经验
- 最佳的印刷质量

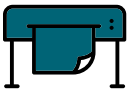

Printing industry

- Extensive application experience
- Higher quality end product

农产品行业

- 减速机运行可靠且使用寿命极长
- 适用于恶劣环境

Agricultural machinery

- Reliable and long-lasting gearboxes
- Suitable for use in harsh conditions

Neugart完整的产品系列可以用于任何传动情况。凭借各类精密减速机，如今我们已与40多个行业成功开展了合作。

Neugart's fully developed product portfolio can handle virtually all applications with controlled motion. We are already precision gearbox partners in over 40 industries.

经济型同轴减速机 Economy Line coaxial gearboxes

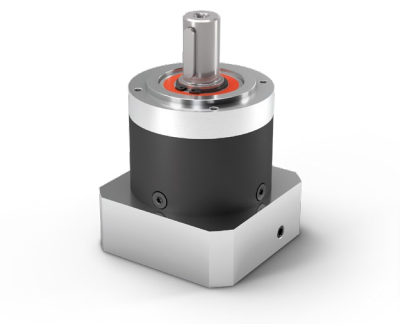

PLE

页 Page 18

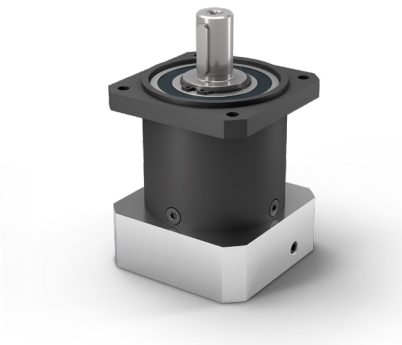

PLQE

页 Page 24

PLPE

页 Page 30

PLHE

页 Page 36

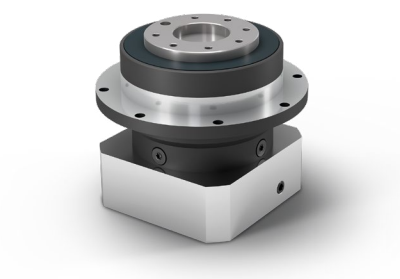

PLFE

页 Page 42

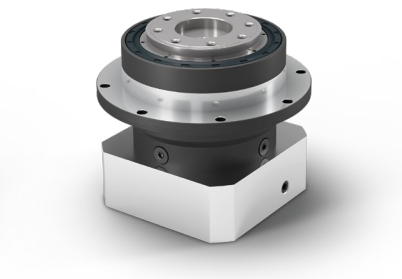

PFHE

页 Page 48

经济型直角型减速机 Economy Line right angle gearboxes

WPLE

页 Page 54

WPLQE

页 Page 60

WPLPE

页 Page 66

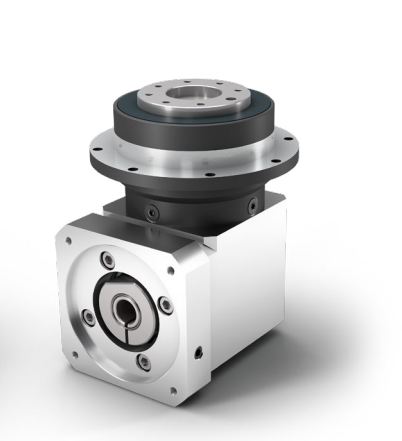

WPLFE

页 Page 72

精密型同轴减速机 Precision Line coaxial gearboxes

PSBN

页 Page 78

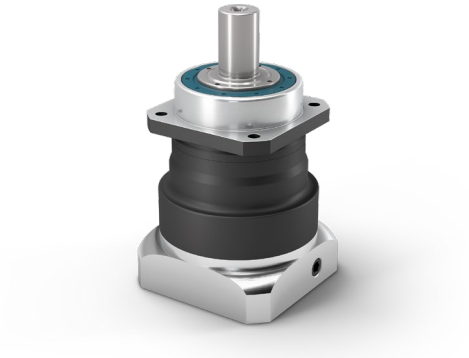

PSN

页 Page 84

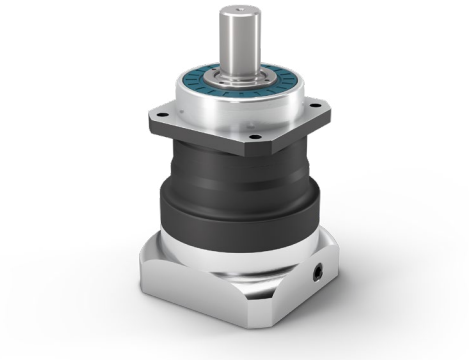

PLN

页 Page 90

PSFN

页 Page 96

PLFN

页 Page 102

精密型直角型减速机 Precision Line right angle gearboxes

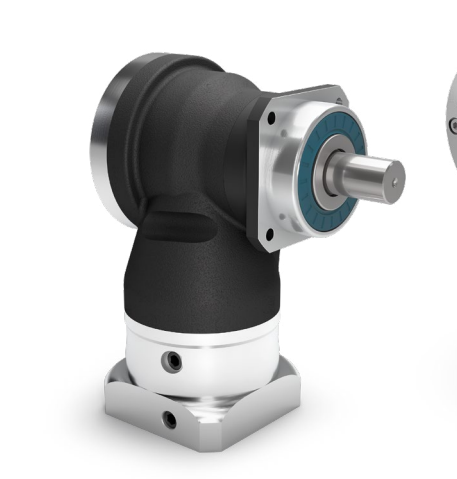

WPLN

页 Page 108

WPSFN

页 Page 114

WGN

页 Page 120

针对特定应用的减速机 Application-specific gearboxes

HLAE

页 Page 126

NGV

页 Page 132

装有小齿轮的高精度减速机 Planetary gearboxes with mounted pinion

PK1

页 Page 140

PM1

页 Page 140

我们减速机的特点 Our gearbox features

高效率

高精度行星减速机的工作效率高，最高为98%。传递的扭矩分配在几个齿轮上，这样每个啮合齿的摩擦就减少了。

High efficiency

Planetary gearboxes have an excellent efficiency of up to 98%. The torque being transmitted is distributed over several gearing elements, so that the friction per engaged tooth is reduced.

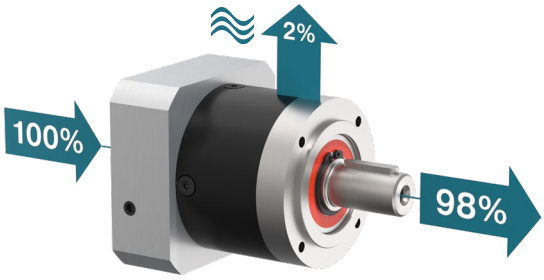

可以安装在任何位置

凭借优化的润滑设计，我们的减速机可以在任何位置上运行，而且不会降低性能。

Can be mounted in all spatial orientations

Thanks to the optimized lubrication concept, our gearboxes can be operated in any position without any loss of performance.

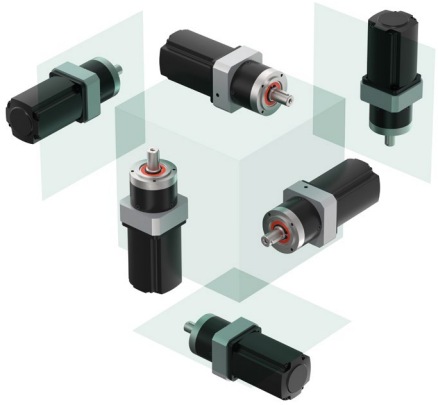

对驱动法兰进行单独调整，使其与电机适配。

在Neugart Tec Data Finder (TDF)中，只需点击几下，就可以找到各种不同的电机型号，现有20.000个不同的电机。

Individual adaptation of the drive flange to the motor

From a wide range of different motor adapters, the right adapter for up to 20,000 different motors can be found with just a few clicks in the Neugart Tec Data Finder (TDF).

整个使用寿命过程中仅需一次润滑，无需维护

使用专门根据高精度减速机优化过的高质量润滑剂以后，在正常的应用条件下，Neugart 减速机在整个使用寿命期间无需维护。

Lifetime lubrication for maintenance-free operation

Use of high-quality lubricants, optimized specifically for the requirements in planetary gearboxes, makes Neugart gearboxes maintenance-free over their service life under normal operating conditions.

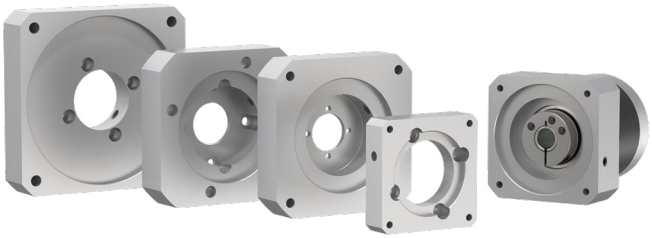

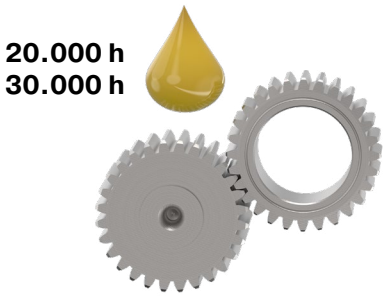

经过优化的转动惯量锁紧系统

我们减速机的锁紧系统经过重量优化变得更轻，由此提高了整个动力总成的动态性能。

Clamping systems with optimized mass moment of inertia

The clamping systems of our gearboxes are optimized for low weight, which can increase the dynamics of the entire drive train.

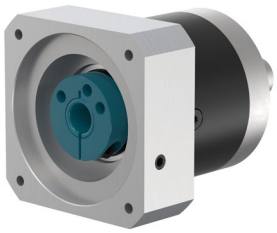

功率等级 Performance classes

产品概览 。

在此概览中您可以找到产品的重要特性。

经济型		额定输出扭矩 Nominal output torque	回程间隙 Backlash	轴承最大承载能力 Bearing load	防护等级 Protection class	运行噪音 Running noise	输入转速 Input speeds	抗扭刚性 Torsional stiffness	传动比多样性 Wide range of ratios
PLE		●●○○	●●○○	●○○○	●●○○	●●○○	●●●●	●●○○	●●●●
PLQE		●●○○	●●○○	●●○○	●●○○	●●○○	●●●●	●●○○	●●●●
PLPE		●●○○	●●○○	●●○○	●●○○	●●○○	●●●●	●●○○	●●●○
PLHE		●●○○	●●○○	●●●○	●●●○	●●○○	●●●○	●●○○	●●●○
PLFE		●●○○	●●○○	●●○○	●●○○	●●○○	●●●●	●●●○	●●●○
PFHE		●●○○	●●○○	●●●●	●●●○	●●○○	●●●○	●●●●	●●●○
WPLE		●○○○	●○○○	●○○○	●●○○	●○○○	●●●○	●○○○	●●●●
WPLQE		●○○○	●○○○	●●○○	●●○○	●○○○	●●●○	●○○○	●●●●
WPLPE		●○○○	●○○○	●●○○	●●○○	●○○○	●●●○	●○○○	●●●○
WPLFE		●○○○	●○○○	●●○○	●●○○	●○○○	●●●○	●●●○	●●●○

●○○○ 标准　　●●●● 优秀　　●○○○ Standard　　●●●● Excellent

常州库克传动科技有限公司
技术服务专线：189-1589-6797
Technical Service Line www.czkuke.com

功率等级 Performance classes

Our program at a glance.

In this overview you will find a direct comparison of the key features of our products.

精密型		额定输出扭矩 Nominal output torque	回程间隙 Backlash	轴承最大承载能力 Bearing load	防护等级 Protection class	运行噪音 Running noise	输入转速 Input speeds	抗扭刚性 Torsional stiffness	传动比多样性 Wide range of ratios
PSBN		▬▬▬▬	▬▬▬▬	▬▬▬▬	▬▬▬▬	▬▬▬▬	▬▬▬▬	▬▬▬▬	▬▬▬▬
PSN		▬▬▬▬	▬▬▬▬	▬▬▬▬	▬▬▬▬	▬▬▬▬	▬▬▬▬	▬▬▬▬	▬▬▬▬
PLN		▬▬▬▬	▬▬▬▬	▬▬▬▬	▬▬▬▬	▬▬▬▬	▬▬▬▬	▬▬▬▬	▬▬▬▬
PSFN		▬▬▬▬	▬▬▬▬	▬▬▬▬	▬▬▬▬	▬▬▬▬	▬▬▬▬	▬▬▬▬	▬▬▬▬
PLFN		▬▬▬▬	▬▬▬▬	▬▬▬▬	▬▬▬▬	▬▬▬▬	▬▬▬▬	▬▬▬▬	▬▬▬▬
WPLN		▬▬▬▬	▬▬▬▬	▬▬▬▬	▬▬▬▬	▬▬▬▬	▬▬▬▬	▬▬▬▬	▬▬▬▬
WPSFN		▬▬▬▬	▬▬▬▬	▬▬▬▬	▬▬▬▬	▬▬▬▬	▬▬▬▬	▬▬▬▬	▬▬▬▬
WGN		▬▬▬▬	▬▬▬▬	▬▬▬▬	▬▬▬▬	▬▬▬▬	▬▬▬▬	▬▬▬▬	▬▬▬▬

针对特定应用的减速机 Application specific gearboxes		额定输出扭矩 Nominal output torque	回程间隙 Backlash	轴承最大承载能力 Bearing load	防护等级 Protection class	运行噪音 Running noise	输入转速 Input speeds	抗扭刚性 Torsional stiffness	传动比多样性 Wide range of ratios
HLAE		▬▬▬▬	▬▬▬▬	▬▬▬▬	▬▬▬▬	▬▬▬▬	▬▬▬▬	▬▬▬▬	▬▬▬▬
NGV		▬▬▬▬	▬▬▬▬	▬▬▬▬	▬▬▬▬	▬▬▬▬	▬▬▬▬	▬▬▬▬	▬▬▬▬

▬ 标准 ▬▬▬▬ 优秀 ▬ Standard ▬▬▬▬ Excellent

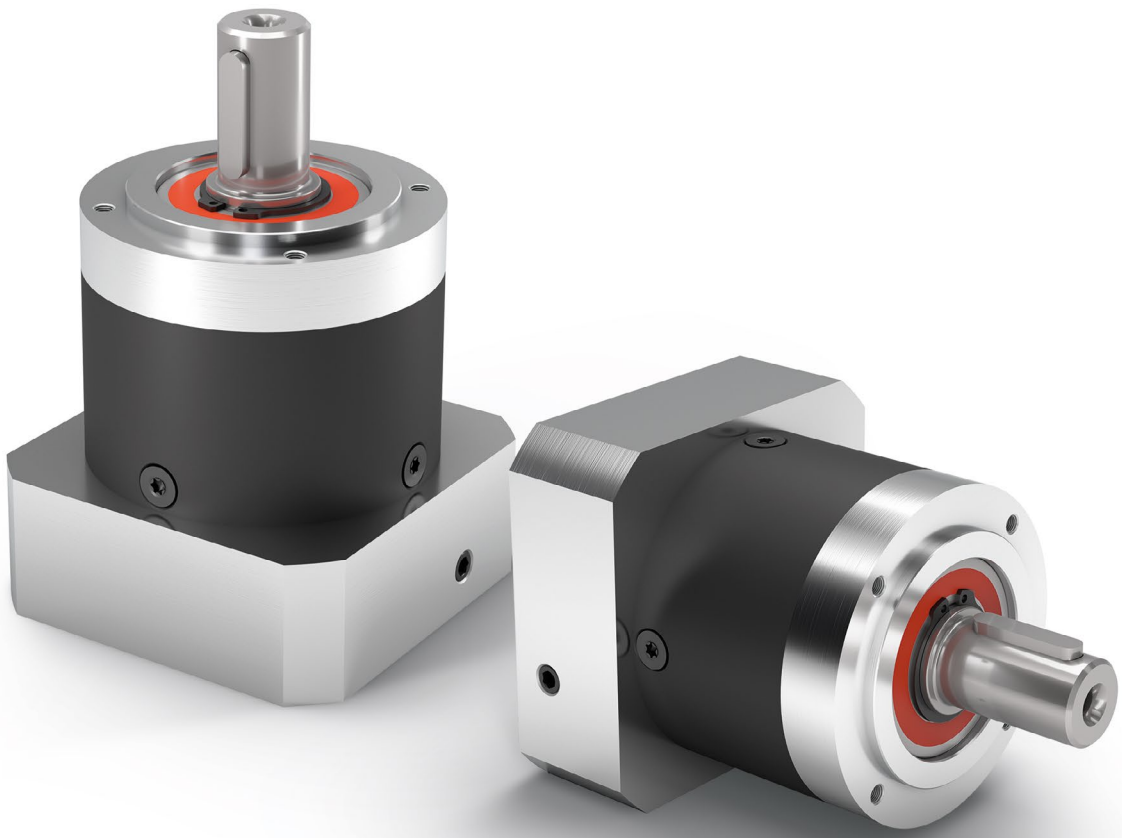

PLE

其优势在于：此款行星减速机即使在最高转速时也能达到最高效率

PLE 系列是我们取得成功的基石。该系列产品极轻、性能十分强劲，且由于其低摩擦损耗轴承设计和优化的润滑功能，十分适用于高标准的生产工况。一款真正强效且价格合理的产品。

Unparalleled: This planetary gearbox maintains its maximum efficiency even at the highest speeds

The **PLE** is perhaps the basis of our success. It is notably light, extremely powerful, yet suitable for complex production cycles due to its low-friction bearing design and optimized lubrication. A genuine powerhouse at an attractive, fair price.

额定扭矩 Nominal output torque	**5 - 800 Nm**
径向力 Radial force	**200 - 5000 N**
轴向力 Axial force	**200 - 7000 N**
回程间隙 Torsional backlash	**6 - 22 arcmin**
防护等级 Protection class	**IP54**

结构尺寸
Frame sizes

40 **60** **80** **120** **160**

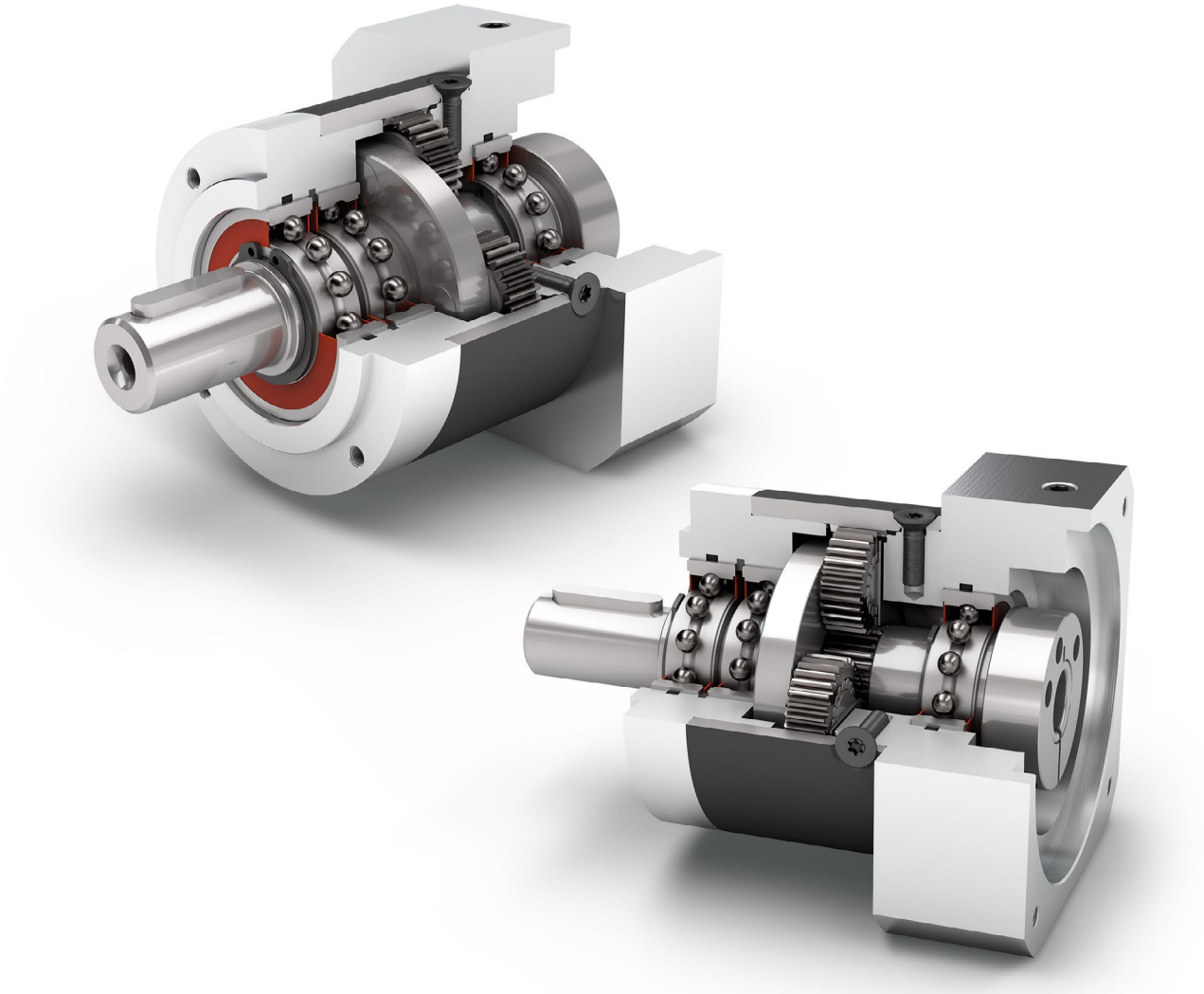

经济型
Economy Line

同轴减速机
Coaxial gearbox

旋转方向 同方向
Equidirectional rotation

直齿
Spur gear

圆形输出法兰
Round type output flange

低摩擦深沟球轴承
Low-friction deep groove ball bearings

多样的传动比（i=3 至 i=512）
High ratio variety i=3 up to i=512

行星齿轮架
Planet carrier in disc design

技术特点的详细解释，请从第169页读起。
Detailed explanations of the technical features starting on page 169.

Code	减速机参数	Gearbox characteristics			PLE040	PLE060	PLE080	PLE120	PLE160	p[1]
	使用寿命（L_{10h}）	Service life (L_{10h})	t_L	h	30.000					
	满载时效率[2]	Efficiency at full load[2]	η	%	98					1
					97					2
					92					3
	最低工作温度	Min. operating temperature	T_{min}	°C	-25					
	最高工作温度	Max. operating temperature	T_{max}		90					
	防护等级	Protection class			IP54					
S	标准润滑	Standard lubrication			润滑脂（终生润滑）/ Grease (lifetime lubrication)					
F	食品级润滑	Food grade lubrication			润滑脂（终生润滑）/ Grease (lifetime lubrication)					
L	低温润滑[3]	Low temperature lubrication[3]			润滑脂（终生润滑）/ Grease (lifetime lubrication)					
	安装位置	Installation position			任意 / Any					
S	标准回程间隙	Standard backlash	j_t	arcmin	< 15	< 10	< 7	< 7	< 6	1
					< 19	< 12	< 9	< 9	< 9	2
					< 22	< 15	< 11	< 11	-	3
	抗扭刚度[2]	Torsional stiffness[2]	c_g	Nm / arcmin	0,7 - 1,0	2,1 - 2,8	7,2 - 10,0	15,5 - 21,0	57,5 - 69,0	1
					0,8 - 1,0	2,3 - 2,8	7,9 - 10,4	17,5 - 22,0	61,0 - 75,0	2
					0,8 - 1,0	2,3 - 2,8	7,9 - 10,5	17,5 - 22,0	-	3
	减速机重量[2]	Gearbox weight[2]	m_G	kg	0,3 - 0,4	0,9	2,1	5,6 - 5,7	17,4 - 17,6	1
					0,4 - 0,5	1,1	2,6	7,3 - 7,5	23,5 - 23,7	2
					0,5	1,3	3,1	9,2 - 9,4	-	3
S	标准的箱体表面	Standard surface			箱体:钢 – 热处理后氧化（黑色） Housing: Steel – heat-treated and post-oxidized (black)					
	运行噪音[4]	Running noise[4]	Q_g	dB(A)	58	58	60	65	70	
	基于减速机输入法兰的最大弯矩[5]	Max. bending moment based on the gearbox input flange[5]	M_b	Nm	3	8	16	40	140	

输出轴载荷	Output shaft loads			PLE040	PLE060	PLE080	PLE120	PLE160	p[1]
20,000 h 的径向力[6][7]	Radial force for 20,000 h[6][7]	$F_{r\,20.000\,h}$	N	200	400	750	1750	5000	
20,000 h 的轴向力[6][7]	Axial force for 20,000 h[6][7]	$F_{a\,20.000\,h}$		200	500	1000	2500	7000	
30,000 h 的径向力[6][7]	Radial force for 30,000 h[6][7]	$F_{r\,30.000\,h}$		160	340	650	1500	4200	
30,000 h 的轴向力[6][7]	Axial force for 30,000 h[6][7]	$F_{a\,30.000\,h}$		160	450	900	2100	6000	
最大径向力[7][8]	Maximum radial force[7][8]	$F_{r\,Stat}$		200	700	1250	2000	5000	
最大轴向力[7][8]	Maximum axial force[7][8]	$F_{a\,Stat}$		240	800	1600	3800	11000	
20,000 h 倾斜力矩[6][8]	Tilting moment for 20,000 h[6][8]	$M_{K\,20.000\,h}$	Nm	5	14	31	101	474	
30,000 h 倾斜力矩[6][8]	Tilting moment for 30,000 h[6][8]	$M_{K\,30.000\,h}$		4	12	27	86	398	

转动惯量	Moment of inertia			PLE040	PLE060	PLE080	PLE120	PLE160	p[1]
转动惯量[2]	Mass moment of inertia[2]	J	kgcm²	0,014 - 0,027	0,065 - 0,128	0,359 - 0,654	1,378 - 2,361	3,726 - 11,999	1
				0,015 - 0,026	0,066 - 0,121	0,365 - 0,613	1,414 - 2,288	3,502 - 10,087	2
				0,015 - 0,025	0,066 - 0,076	0,365 - 0,590	1,413 - 2,196	-	3

(1) 减速机级数
(2) 传动比相关的数值可在 Tec Data Finder 中检索 – www.neugart.com
(3) T_{min} = -40°C. 理想运行温度最高为 50°C
(4) 距离减速机1 m 时; 在输入转速为 n_1=3000 min^{-1} 且无负荷时测得; i=5
(5) 最大电机重量* (单位 : kg) = 0.2 x M_b / 电机长度 (单位: m)
* 电机重量对称分布
* 水平和固定的安装位置
(6) 数据以 n_2=100 min^{-1} 的输出轴转速为准。
(7) 以输出轴中心为准
(8) 更改 T_{2N}, F_r, F_a 以及周期和轴承使用寿命时，数值存在偏差(部分较高)。利用 NCP 针对应用进行专门设计 – www.neugart.com

(1) Number of stages
(2) The ratio-dependent values can be retrieved in Tec Data Finder – www.neugart.com
(3) T_{min} = -40°C. Optimal operating temperature max. 50°C
(4) Sound pressure level from 1 m, measured on input running at n_1=3000 rpm no load; i=5
(5) Max. motor weight* in kg = 0.2 x M_b / motor length in m
* with symmetrically distributed motor weight
* with horizontal and stationary mounting
(6) These values are based on an output shaft speed of n_2=100 rpm
(7) Based on center of output shaft
(8) Other (sometimes higher) values following changes to T_{2N}, F_r, F_a, cycle, and service life of bearing. Application specific configuration with NCP – www.neugart.com

输出扭矩	Output torques			PLE040	PLE060	PLE080	PLE120	PLE160	i(1)	p(2)
额定输出扭矩(3)(4)	Nominal output torque(3)(4)	T_{2N}	Nm	11	28	85	115	400	3	1
				15	38	115	155	450	4	
				14	40	110	195	450	5	
				8,5	25	65	135	-	7	
				6	18	50	120	450	8	
				5	15	38	95	-	10	
				16,5	44	130	210	-	9	2
				20	44	120	260	800	12	
				18	44	110	230	700	15	
				20	44	120	260	800	16	
				20	44	120	260	800	20	
				18	40	110	230	700	25	
				20	44	120	260	800	32	
				18	40	110	230	700	40	
				7,5	18	50	120	450	64	
				20	44	110	260	-	60	3
				20	44	120	260	-	80	
				20	44	120	260	-	100	
				18	44	110	230	-	120	
				20	44	120	260	-	160	
				18	40	110	230	-	200	
				20	44	120	260	-	256	
				18	40	110	230	-	320	
				7,5	18	50	120	-	512	
最大输出扭矩(4)(5)	Max. output torque(4)(5)	T_{2max}	Nm	17,5	45	136	184	640	3	1
				24	61	184	248	720	4	
				22	64	176	312	720	5	
				13,5	40	104	216	-	7	
				10	29	80	192	720	8	
				8	24	61	152	-	10	
				26	70	208	336	-	9	2
				32	70	192	416	1280	12	
				29	70	176	368	1120	15	
				32	70	192	416	1280	16	
				32	70	192	416	1280	20	
				29	64	176	368	1120	25	
				32	70	192	416	1280	32	
				29	64	176	368	1120	40	
				12	29	80	192	720	64	
				32	70	176	416	-	60	3
				32	70	192	416	-	80	
				32	70	192	416	-	100	
				29	70	176	368	-	120	
				32	70	192	416	-	160	
				29	64	176	368	-	200	
				32	70	192	416	-	256	
				29	64	176	368	-	320	
				12	29	80	192	-	512	

(1) 传动比 ($i=n_1/n_2$)
(2) 减速机级数
(3) 利用 NCP 针对应用进行专门设计 – www.neugart.com
(4) 平键 (代码 "A")时的数值: 针对交变载荷
(5) 允许输出轴转动30.000转; 参见第 158 页

(1) Ratios ($i=n_1/n_2$)
(2) Number of stages
(3) Application specific configuration with NCP – www.neugart.com
(4) Values for feather key (code "A"): for repeated load
(5) 30,000 rotations of the output shaft permitted; see page 159

输出扭矩	Output torques			PLE040	PLE060	PLE080	PLE120	PLE160	i[1]	p[2]
急停扭矩[3]	Emergency stop torque[3]	T_{2Stop}	Nm	22,5	66	180	390	800	3	1
				30	88	240	520	900	4	
				36	80	220	500	900	5	
				26	80	178	340	-	7	
				27	80	190	380	900	8	
				27	80	200	480	-	10	
				33	88	260	500	-	9	2
				40	88	240	520	1600	12	
				36	88	220	500	1400	15	
				40	88	240	520	1600	16	
				40	88	240	520	1600	20	
				36	80	220	500	1400	25	
				40	88	240	520	1600	32	
				36	80	220	500	1400	40	
				27	80	190	380	900	64	
				40	88	220	520	-	60	3
				40	88	240	520	-	80	
				40	88	240	520	-	100	
				36	88	220	500	-	120	
				40	88	240	520	-	160	
				36	80	220	500	-	200	
				40	88	240	520	-	256	
				36	80	220	500	-	320	
				27	80	190	380	-	512	

输入转速	Input speeds			PLE040	PLE060	PLE080	PLE120	PLE160	i[1]	p[2]
T_{2N} 和 S1 时的平均热输入转速[4][5]	Average thermal input speed at T_{2N} and S1[4][5]	n_{1N}	min^{-1}	5000	4500	4000[6]	3400[6]	1350[6]	3	1
				5000	4500	3900[6]	3500[6]	1450[6]	4	
				5000	4500	4000[6]	3500[6]	1700[6]	5	
				5000	4500	4000	3500	-	7	
				5000	4500	4000	3500	2200[6]	8	
				5000	4500	4000	3500	-	10	
				5000	4500	4000[6]	3500[6]	-	9	2
				5000	4500	4000[6]	3500[6]	1600[6]	12	
				5000	4500	4000	3500[6]	1900[6]	15	
				5000	4500	4000	3500[6]	1800[6]	16	
				5000	4500	4000	3500	2100[6]	20	
				5000	4500	4000	3500	2400[6]	25	
				5000	4500	4000	3500	2700[6]	32	
				5000	4500	4000	3500	3000[6]	40	
				5000	4500	4000	3500	3000	64	
				5000	4500	4000	3500	-	60	3
				5000	4500	4000	3500	-	80	
				5000	4500	4000	3500	-	100	
				5000	4500	4000	3500	-	120	
				5000	4500	4000	3500	-	160	
				5000	4500	4000	3500	-	200	
				5000	4500	4000	3500	-	256	
				5000	4500	4000	3500	-	320	
				5000	4500	4000	3500	-	512	
最高机械输入转速[4]	Max. mechanical input speed[4]	n_{1Limit}	min^{-1}	18000	13000	7000	6500	6500		1
				18000	13000	7000	6500	6500		2
				18000	13000	7000	6500	-		3

(1) 传动比 ($i=n_1/n_2$)
(2) 减速机级数
(3) 允许 1000 次
(4) 利用 NCP 针对应用设计转速 – www.neugart.com
(5) 定义请参见第 158 页
(6) 在 50% T_{2N} 输出和 S1 模式下 的平均热传动转速

(1) Ratios ($i=n_1/n_2$)
(2) Number of stages
(3) Permitted 1000 times
(4) Application-specific speed configurations with NCP – www.neugart.com
(5) See page 159 for the definition
(6) Average thermal input speed at 50% T_{2N} and S1

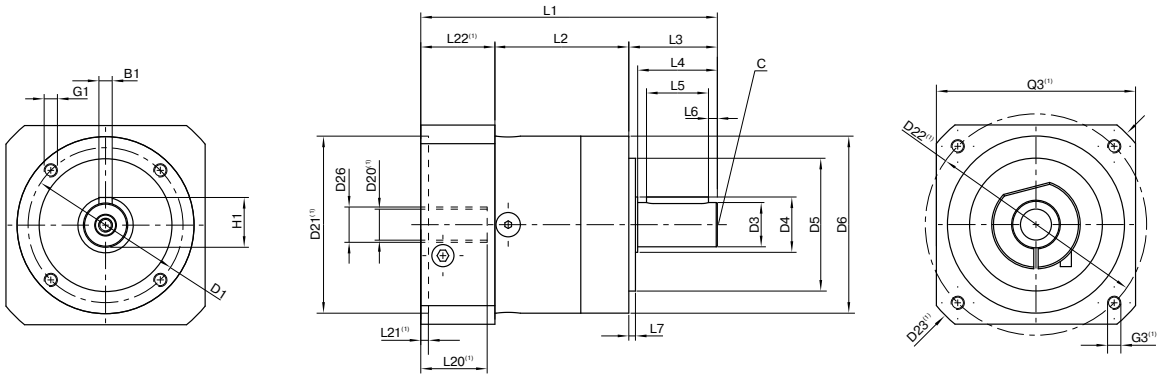

图示为带平键的 PLE060 / 1 级 / 附带平键的输出轴 / 11 mm 锁紧系统 / 适配电机法兰 - 单一法兰 / B5 电机法兰类型
Drawing corresponds to a PLE060 / 1-stage / output shaft with feather key / 11 mm clamping system / motor adaptation – one part / B5 flange type motor

(1) 具体尺寸视电机/减速机法兰而定。可以在 www.neugart.com 下 Tec Data Finder。中针对每个电机适配电机特有的输入法兰几何尺寸。
(1) The dimensions vary with the motor/gearbox flange. The input flange dimensions can be retrieved for each specific motor in Tec Data Finder at www.neugart.com

几何尺寸(2)	Geometry(2)			PLE040	PLE060	PLE080	PLE120	PLE160	p(3)	Code
输出端安装孔节圆直径	Pitch circle diameter output	D1		34	52	70	100	145		
输出轴直径	Shaft diameter output	D3	h7	10	14	20	25	40		
输出轴轴肩直径	Shaft collar output	D4		12	17	25	35	55		
输出端定位凸台直径	Centering diameter output	D5	h7	26	40	60	80	130		
箱体直径	Housing diameter	D6		40	60	80	115	160		
安装螺纹 x 深度	Mounting thread x depth	G1	4x	M4x6	M5x8	M6x10	M10x16	M12x20		
最小总长	Min. total length	L1		88,5	106	133,5	176,5	255,5	1	
				106,5	118,5	150,5	204	305	2	
				114	131	168	231,5	-	3	
箱体长度	Housing length	L2		39	47	60	74	104	1	
				51,5	59,5	78	102	153,5	2	
				64,5	72	95,5	129,5	-	3	
输出轴轴长	Shaft length output	L3		26	35	40	55	87		
输出端定位凸台深度	Centering depth output	L7		2	3	3	4	5		
电机轴直径 j6/k6	Motor shaft diameter j6/k6	D20		更多信息见第 155/156 页 More information on page 155/156						
输入端锁紧系统直径	Clamping system diameter input	D26								
带平键的输出轴 (DIN 6885-1)	Output shaft with feather key (DIN 6885-1)			A 3x3x18	A 5x5x25	A 6x6x28	A 8x7x40	A 12x8x65		A
平键宽度 (DIN 6885-1)	Feather key width (DIN 6885-1)	B1		3	5	6	8	12		
含平键在内的轴高 (DIN 6885-1)	Shaft height including feather key (DIN 6885-1)	H1		11,2	16	22,5	28	43		
到轴肩的距离	Shaft length from shoulder	L4		23	30	36	50	80		
平键长度	Feather key length	L5		18	25	28	40	65		
到轴端的距离	Distance from shaft end	L6		2,5	2,5	4	5	8		
中心孔 (DIN 332, DR)	Center hole (DIN 332, type DR)	C		M3x9	M5x12,5	M6x16	M10x22	M16x36		
光滑输出轴	Smooth output shaft									B
到轴肩的距离	Shaft length from shoulder	L4		23	30	36	50	80		

(2) 所有的尺寸单位为mm
(3) 减速机级数

(2) Dimensions in mm
(3) Number of stages

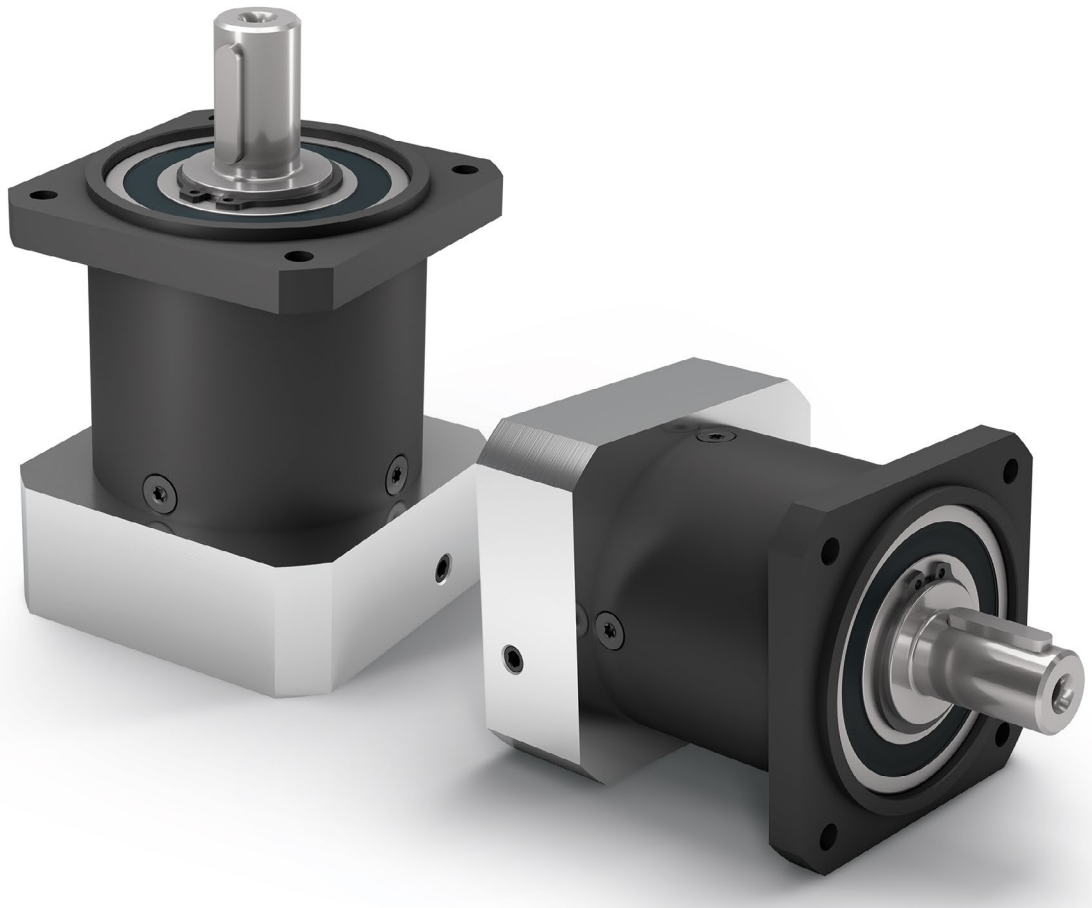

PLQE

一款可便捷安装的行星减速机
发热量低
可承受较高的力

这款 **PLQE** 结构简单，功能强劲。无需中间法兰便可直接将其连接在设备上。输出端较大规格的深沟球轴承能够承受较高的径向力和轴向力。同时仅产生极低的热量，即使在要求极高的生产循环中也能安全可靠地运行。

The easy to install planetary gearbox absorbs high forces with low heat generation

Our **PLQE** is uncomplicated and powerful. It can be connected directly to your installation without the need for an intermediate flange. The large deep groove ball bearings at the output can absorb large axial and radial forces. In the process, only little heat is generated, so reliable operations are assured even in complex production cycles.

额定扭矩 Nominal output torque	**15 - 260 Nm**
径向力 Radial force	**900 - 2950 N**
轴向力 Axial force	**1000 - 2500 N**
回程间隙 Torsional backlash	**7 - 15 arcmin**
防护等级 Protection class	**IP54**

结构尺寸
Frame sizes

60 **80** **120**

常州库克传动科技有限公司
技术服务专线：189-1589-6797
Technical Service Line www.czkuke.com

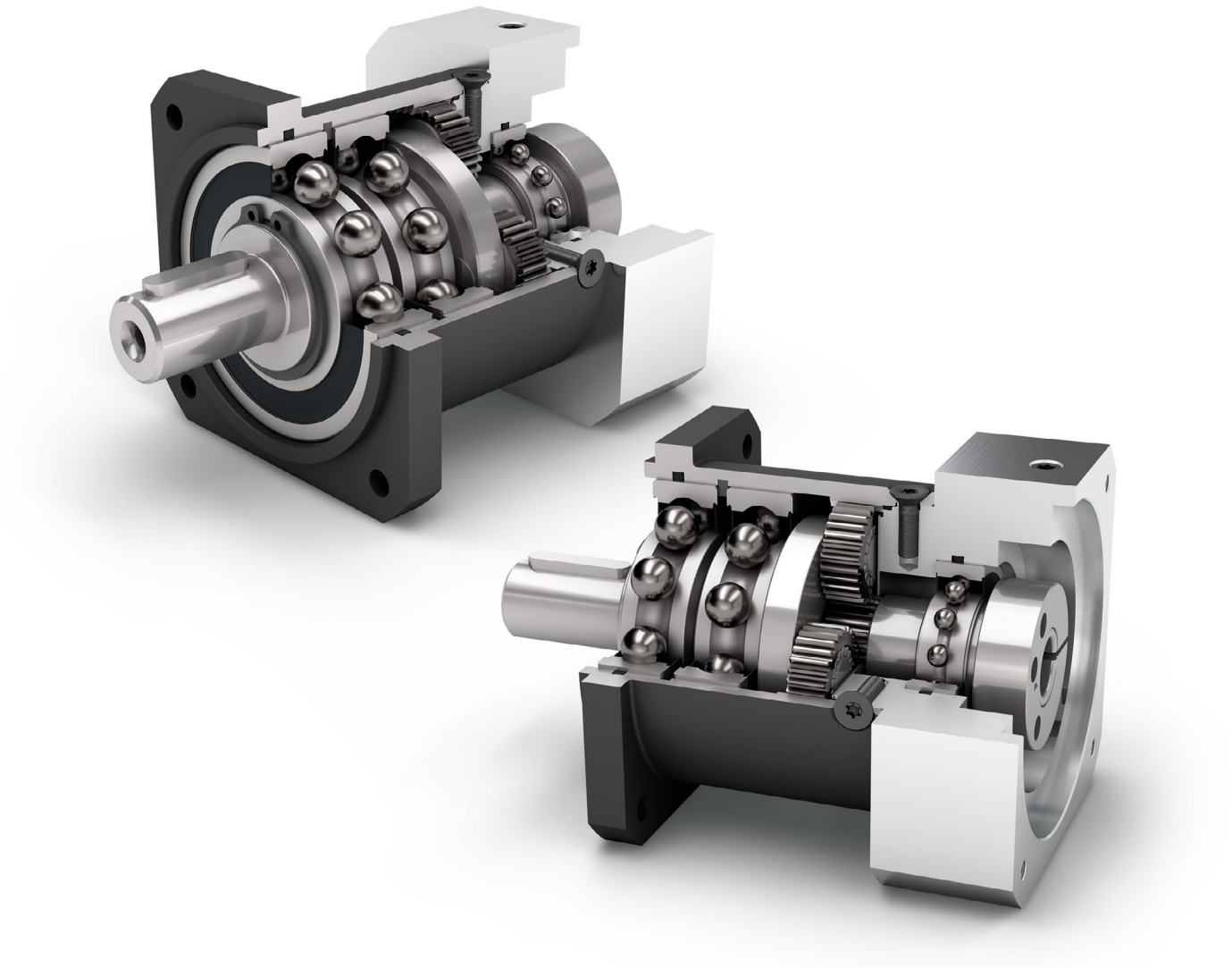

经济型
Economy Line

同轴减速机
Coaxial gearbox

旋转方向 同方向
Equidirectional rotation

直齿
Spur gear

正方形输出法兰
Square type output flange

增强深沟球轴承
Reinforced deep groove ball bearings

多样的传动比（i=3 至 i=512）
High ratio variety i=3 up to i=512

行星齿轮架
Planet carrier in disc design

技术特点的详细解释，请从第169页读起。
Detailed explanations of the technical features starting on page 169.

Code	减速机参数	Gearbox characteristics			PLQE060	PLQE080	PLQE120	p(1)
	使用寿命 (L_{10h})	Service life (L_{10h})	t_L	h	30.000			
	满载时效率(2)	Efficiency at full load(2)	η	%	98			1
					97			2
					92			3
	最低工作温度	Min. operating temperature	T_{min}	°C	-25			
	最高工作温度	Max. operating temperature	T_{max}		90			
	防护等级	Protection class			IP54			
S	标准润滑	Standard lubrication			润滑脂(终生润滑) / Grease (lifetime lubrication)			
F	食品级润滑	Food grade lubrication			润滑脂(终生润滑) / Grease (lifetime lubrication)			
L	低温润滑(3)	Low temperature lubrication(3)			润滑脂(终生润滑) / Grease (lifetime lubrication)			
	安装位置	Installation position			任意 / Any			
S	标准回程间隙	Standard backlash	j_t	arcmin	< 10	< 7	< 7	1
					< 12	< 9	< 9	2
					< 15	< 11	< 11	3
	抗扭刚度(2)	Torsional stiffness(2)	c_g	Nm / arcmin	2,8 - 4,0	8,5 - 12,6	14,0 - 18,5	1
					3,3 - 4,1	9,4 - 13,3	15,6 - 19,0	2
					3,3 - 4,1	9,4 - 13,4	15,6 - 19,0	3
	减速机重量(2)	Gearbox weight(2)	m_G	kg	1,1	2,7 - 2,9	6,4 - 6,5	1
					1,3	3,4 - 3,5	8,1 - 8,3	2
					1,5	3,9 - 4,0	9,9 - 10,1	3
S	标准的箱体表面	Standard surface			箱体:钢 – 热处理后氧化(黑色) Housing: Steel – heat-treated and post-oxidized (black)			
	运行噪音(4)	Running noise(4)	Q_g	dB(A)	58	60	65	
	基于减速机输入法兰的最大弯矩(5)	Max. bending moment based on the gearbox input flange(5)	M_b	Nm	8	16	40	

输出轴载荷	Output shaft loads			PLQE060	PLQE080	PLQE120	p(1)
20,000 h 的径向力(6)(7)	Radial force for 20,000 h(6)(7)	$F_{r\,20.000\,h}$	N	900	2050	2950	
20,000 h 的轴向力(6)(7)	Axial force for 20,000 h(6)(7)	$F_{a\,20.000\,h}$		1000	2500	2500	
30,000 h 的径向力(6)(7)	Radial force for 30,000 h(6)(7)	$F_{r\,30.000\,h}$		700	1700	2400	
30,000 h 的轴向力(6)(7)	Axial force for 30,000 h(6)(7)	$F_{a\,30.000\,h}$		800	2000	2100	
最大径向力(7)(8)	Maximum radial force(7)(8)	$F_{r\,Stat}$		1500	2500	4000	
最大轴向力(7)(8)	Maximum axial force(7)(8)	$F_{a\,Stat}$		1950	3800	3800	
20,000 h 倾斜力矩(6)(8)	Tilting moment for 20,000 h(6)(8)	$M_{K\,20.000\,h}$	Nm	37	101	232	
30,000 h 倾斜力矩(6)(8)	Tilting moment for 30,000 h(6)(8)	$M_{K\,30.000\,h}$		29	84	188	

转动惯量	Moment of inertia			PLQE060	PLQE080	PLQE120	p(1)
转动惯量(2)	Mass moment of inertia(2)	J	$kgcm^2$	0,066 - 0,142	0,371 - 0,783	1,381 - 2,393	1
				0,066 - 0,123	0,366 - 0,625	1,414 - 2,292	2
				0,066 - 0,076	0,365 - 0,590	1,413 - 2,196	3

(1) 减速机级数
(2) 传动比相关的数值可在 Tec Data Finder 中检索 – www.neugart.com
(3) T_{min} = -40°C. 理想运行温度最高为 50°C
(4) 距离减速机1 m 时; 在输入转速为 n_1=3000 min^{-1} 且无负荷时测得; i=5
(5) 最大电机重量* (单位: kg) = 0.2 x M_b / 电机长度 (单位: m)
* 电机重量对称分布
* 水平和固定的安装位置
(6) 数据以 n_2=100 min^{-1} 的输出轴转速为准。
(7) 以输出轴中心为准
(8) 更改 T_{2N}, F_r, F_a 以及周期和轴承使用寿命时, 数值存在偏差(部分较高)。利用 NCP 针对应用进行专门设计 – www.neugart.com

(1) Number of stages
(2) The ratio-dependent values can be retrieved in Tec Data Finder – www.neugart.com
(3) T_{min} = -40°C. Optimal operating temperature max. 50°C
(4) Sound pressure level from 1 m, measured on input running at n_1=3000 rpm no load; i=5
(5) Max. motor weight* in kg = 0.2 x M_b / motor length in m
* with symmetrically distributed motor weight
* with horizontal and stationary mounting
(6) These values are based on an output shaft speed of n_2=100 rpm
(7) Based on center of output shaft
(8) Other (sometimes higher) values following changes to T_{2N}, F_r, F_a, cycle, and service life of bearing. Application specific configuration with NCP – www.neugart.com

输出扭矩	Output torques			PLQE060	PLQE080	PLQE120	i(1)	p(2)
额定输出扭矩(3)(4)	Nominal output torque(3)(4)	T_{2N}	Nm	28	85	115	3	1
				38	115	155	4	
				40	110	195	5	
				25	65	135	7	
				18	50	120	8	
				15	38	95	10	
				44	130	210	9	2
				44	120	260	12	
				44	110	230	15	
				44	120	260	16	
				44	120	260	20	
				40	110	230	25	
				44	120	260	32	
				40	110	230	40	
				18	50	120	64	
				44	110	260	60	3
				44	120	260	80	
				44	120	260	100	
				44	110	230	120	
				44	120	260	160	
				40	110	230	200	
				44	120	260	256	
				40	110	230	320	
				18	50	120	512	
最大输出扭矩(4)(5)	Max. output torque(4)(5)	T_{2max}	Nm	45	136	184	3	1
				61	184	248	4	
				64	176	312	5	
				40	104	216	7	
				29	80	192	8	
				24	61	152	10	
				70	208	336	9	2
				70	192	416	12	
				70	176	368	15	
				70	192	416	16	
				70	192	416	20	
				64	176	368	25	
				70	192	416	32	
				64	176	368	40	
				29	80	192	64	
				70	176	416	60	3
				70	192	416	80	
				70	192	416	100	
				70	176	368	120	
				70	192	416	160	
				64	176	368	200	
				70	192	416	256	
				64	176	368	320	
				29	80	192	512	

(1) 传动比 ($i=n_1/n_2$)
(2) 减速机级数
(3) 利用 NCP 针对应用进行专门设计 – www.neugart.com
(4) 平键 (代码 "A")时的数值: 针对交变载荷
(5) 允许输出轴转动30.000转; 参见第 158 页

(1) Ratios ($i=n_1/n_2$)
(2) Number of stages
(3) Application specific configuration with NCP – www.neugart.com
(4) Values for feather key (code "A"): for repeated load
(5) 30,000 rotations of the output shaft permitted; see page 159

输出扭矩	Output torques			PLQE060	PLQE080	PLQE120	i[1]	p[2]
急停扭矩[3]	Emergency stop torque[3]	T_{2Stop}	Nm	66	180	390	3	1
				88	240	520	4	
				80	220	500	5	
				80	178	340	7	
				80	190	380	8	
				80	200	480	10	
				88	260	500	9	2
				88	240	520	12	
				88	220	500	15	
				88	240	520	16	
				88	240	520	20	
				80	220	500	25	
				88	240	520	32	
				80	220	500	40	
				80	190	380	64	
				88	220	520	60	3
				88	240	520	80	
				88	240	520	100	
				88	220	500	120	
				88	240	520	160	
				80	220	500	200	
				88	240	520	256	
				80	220	500	320	
				80	190	380	512	

输入转速	Input speeds			PLQE060	PLQE080	PLQE120	i[1]	p[2]
T_{2N} 和 S1 时的平均热输入转速[4][5]	Average thermal input speed at T_{2N} and S1[4][5]	n_{1N}	min^{-1}	4500[6]	3400[6]	3400[6]	3	1
				4500[6]	3450[6]	3500[6]	4	
				4500	4000[6]	3500[6]	5	
				4500	4000	3500	7	
				4500	4000	3500	8	
				4500	4000	3500	10	
				4500	4000[6]	3500[6]	9	2
				4500	4000[6]	3500[6]	12	
				4500	4000	3500[6]	15	
				4500	4000	3500[6]	16	
				4500	4000	3500	20	
				4500	4000	3500	25	
				4500	4000	3500	32	
				4500	4000	3500	40	
				4500	4000	3500	64	
				4500	4000	3500	60	3
				4500	4000	3500	80	
				4500	4000	3500	100	
				4500	4000	3500	120	
				4500	4000	3500	160	
				4500	4000	3500	200	
				4500	4000	3500	256	
				4500	4000	3500	320	
				4500	4000	3500	512	
最高机械输入转速[4]	Max. mechanical input speed[4]	n_{1Limit}	min^{-1}	13000	7000	6500		1
				13000	7000	6500		2
				13000	7000	6500		3

(1) 传动比 ($i=n_1/n_2$)
(2) 减速机级数
(3) 允许 1000 次
(4) 利用 NCP 针对应用设计转速 – www.neugart.com
(5) 定义请参见第 158 页
(6) 在 50% T_{2N} 输出和 S1 模式下 的平均热传动转速

(1) Ratios ($i=n_1/n_2$)
(2) Number of stages
(3) Permitted 1000 times
(4) Application-specific speed configurations with NCP – www.neugart.com
(5) See page 159 for the definition
(6) Average thermal input speed at 50% T_{2N} and S1

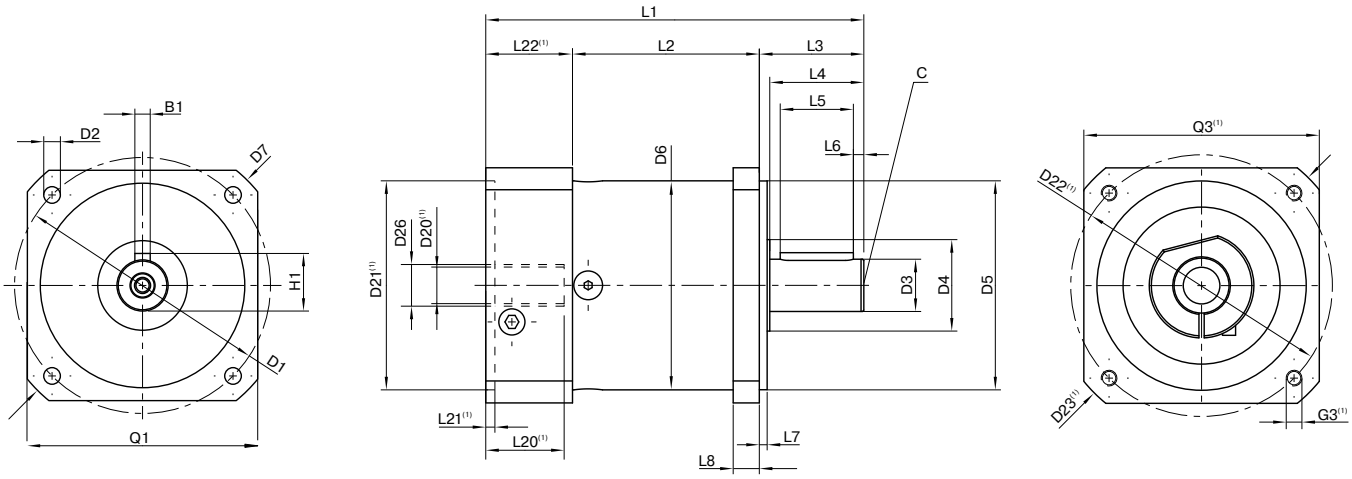

图示为带平键的 PLQE080 / 1 级 / 附带平键的输出轴 / 19 mm 锁紧系统 / 适配电机法兰 - 单一法兰 / B5 电机法兰类型
Drawing corresponds to a PLQE080 / 1-stage / output shaft with feather key / 19 mm clamping system / motor adaptation – one part / B5 flange type motor

(1)具体尺寸视电机/减速机法兰而定。可以在 www.neugart.com 下 Tec Data Finder。中针对每个电机适配电机特有的输入法兰几何尺寸。
(1) The dimensions vary with the motor/gearbox flange. The input flange dimensions can be retrieved for each specific motor in Tec Data Finder at www.neugart.com

几何尺寸(2)	Geometry(2)			PLQE060	PLQE080	PLQE120	p(3)	Code
输出端安装孔节圆直径	Pitch circle diameter output	D1		75	100	130		
输出端安装孔直径	Mounting bore output	D2	4x	5,5	6,5	8,5		
输出轴直径	Shaft diameter output	D3	h7	16	20	25		
输出轴轴肩直径	Shaft collar output	D4		20	35	35		
输出端定位凸台直径	Centering diameter output	D5	h7	60	80	110		
箱体直径	Housing diameter	D6		60	80	115		
输出法兰对角线尺寸	Diagonal dimension output	D7		92	116	145		
输出端法兰外方	Flange cross section output	Q1	■	70	90	115		
最小总长	Min. total length	L1		111	145	201,5	1	
				123,5	162,5	229,5	2	
				136	180	257	3	
箱体长度	Housing length	L2		55	71	99	1	
				67,5	89	127	2	
				80,5	106,5	154,5	3	
输出轴轴长	Shaft length output	L3		32	40	55		
输出端定位凸台深度	Centering depth output	L7		3	3	4		
输出端法兰厚度	Flange thickness output	L8		10	10	15		
电机轴直径 j6/k6	Motor shaft diameter j6/k6	D20		更多信息见第 155/156 页 More information on page 155/156				
输入端锁紧系统直径	Clamping system diameter input	D26						
带平键的输出轴 (DIN 6885-1)	Output shaft with feather key (DIN 6885-1)			A 5x5x20	A 6x6x28	A 8x7x40		A
平键宽度 (DIN 6885-1)	Feather key width (DIN 6885-1)	B1		5	6	8		
含平键在内的轴高 (DIN 6885-1)	Shaft height including feather key (DIN 6885-1)	H1		18	22,5	28		
到轴肩的距离	Shaft length from shoulder	L4		28	36	50		
平键长度	Feather key length	L5		20	28	40		
到轴端的距离	Distance from shaft end	L6		4	4	5		
中心孔 (DIN 332, DR 形)	Center hole (DIN 332, type DR)	C		M5x12,5	M6x16	M10x22		
光滑输出轴	Smooth output shaft							B
到轴肩的距离	Shaft length from shoulder	L4		28	36	50		

(2) 所有的尺寸单位为mm
(3) 减速机级数

(2) Dimensions in mm
(3) Number of stages

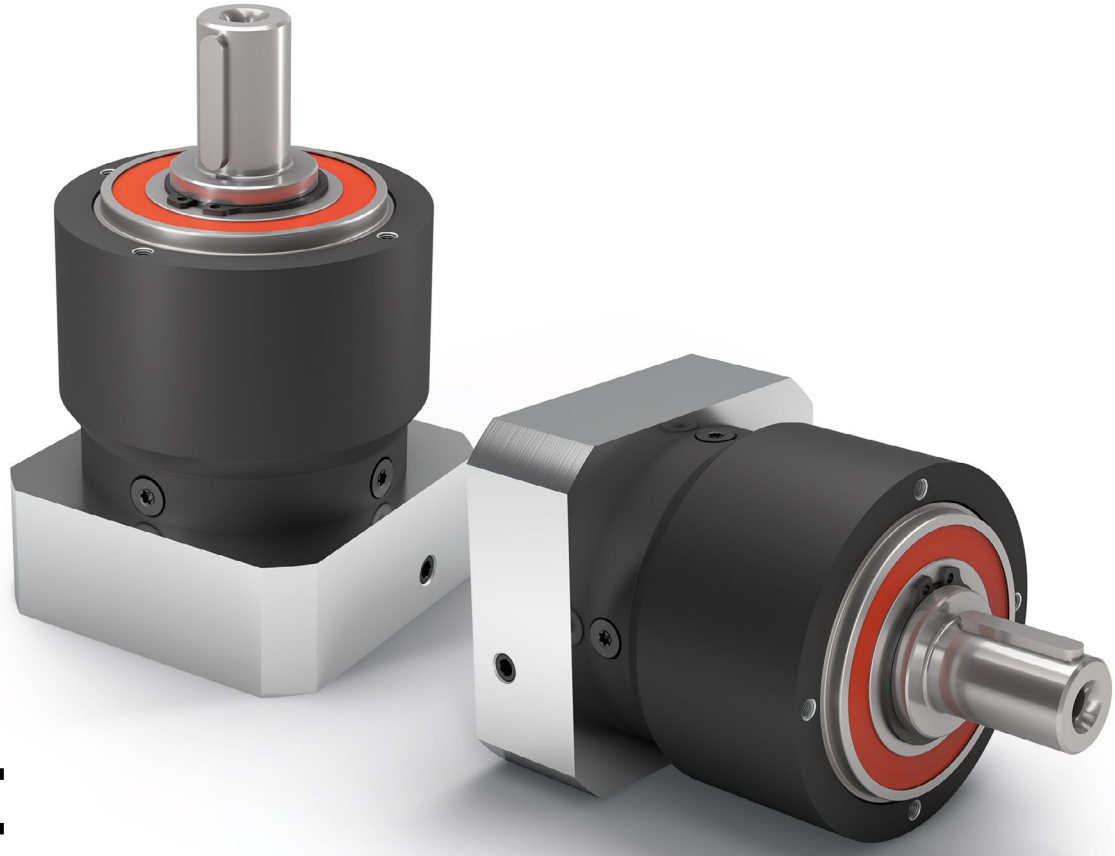

PLPE

经济型行星减速机
发热量低

PLPE 集合了经济型产品系列的最佳特性，同时在性能上又有所提升：它经济实用，同时又性能强劲，而且产生的热量也极少。其经过优化的输出轴承适用于径向力和轴向力较高的应用情况。

The cost effective planetary gearbox with the best torque-low heat performance

Our **PLPE** unites the best properties of the Economy Line with a performance advantage. It is cost effective, yet powerful, and generates minimal heat. The optimized output bearing has been designed for high radial and axial forces.

额定扭矩 Nominal output torque	**5 - 460 Nm**
径向力 Radial force	**800 - 5200 N**
轴向力 Axial force	**1000 - 7000 N**
回程间隙 Torsional backlash	**7 - 19 arcmin**
防护等级 Protection class	**IP54**

结构尺寸
Frame sizes

50 **70** **90** **120** **155**

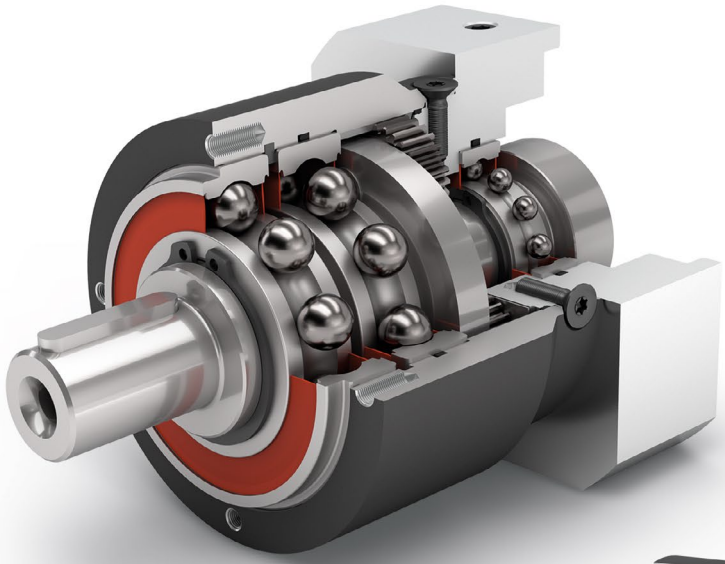

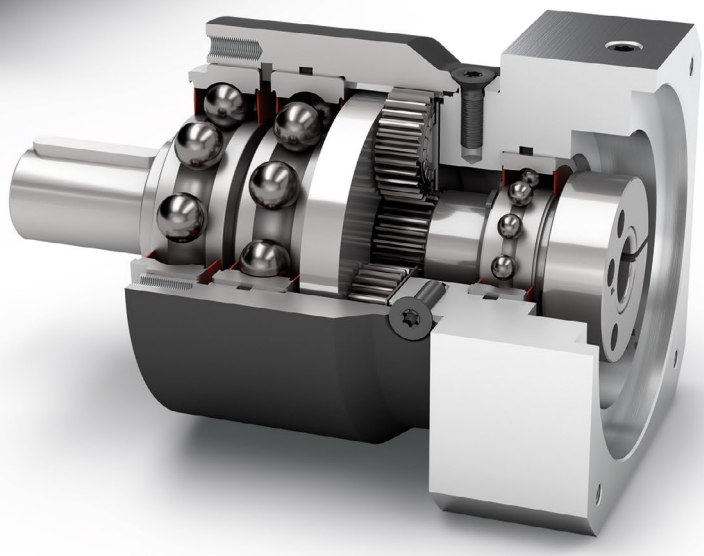

经济型
Economy Line

同轴减速机
Coaxial gearbox

旋转方向 同方向
Equidirectional rotation

直齿
Spur gear

圆形输出法兰
Round type output flange

增强深沟球轴承
Reinforced deep groove ball bearings

行星齿轮架
Planet carrier in disc design

技术特点的详细解释，请从第169页读起。
Detailed explanations of the technical features starting on page 169.

Code	减速机参数	Gearbox characteristics			PLPE050	PLPE070	PLPE090	PLPE120	PLPE155	p(1)
	使用寿命 (L_{10h})	Service life (L_{10h})	t_L	h	30.000					
	满载时效率(2)	Efficiency at full load(2)	η	%	98					1
					97					2
	最低工作温度	Min. operating temperature	T_{min}	°C	-25					
	最高工作温度	Max. operating temperature	T_{max}		90					
	防护等级	Protection class			IP54					
S	标准润滑	Standard lubrication			润滑脂(终生润滑) / Grease (lifetime lubrication)					
F	食品级润滑	Food grade lubrication			润滑脂(终生润滑) / Grease (lifetime lubrication)					
L	低温润滑(3)	Low temperature lubrication(3)			润滑脂(终生润滑) / Grease (lifetime lubrication)					
	安装位置	Installation position			任意 / Any					
S	标准回程间隙	Standard backlash	j_t	arcmin	< 15	< 10	< 7	< 7	< 6	1
					< 19	< 12	< 9	< 9	< 9	2
	抗扭刚度(2)	Torsional stiffness(2)	c_g	Nm / arcmin	0,7 - 1,0	3,5 - 5,6	9,7 - 15,0	24,5 - 39,5	54,5 - 71,0	1
					0,7 - 1,1	3,3 - 5,8	9,7 - 16,1	21,0 - 43,5	55,0 - 73,0	2
	减速机重量(2)	Gearbox weight(2)	m_G	kg	0,6	1,4	3,2 - 3,3	7,4 - 7,5	16,8	1
					0,8 - 1,1	1,7 - 1,9	3,9 - 4,0	9,3 - 9,6	22,1 - 22,5	2
S	标准的箱体表面	Standard surface			箱体:钢 – 热处理后氧化(黑色) Housing: Steel – heat-treated and post-oxidized (black)					
	运行噪音(4)	Running noise(4)	Q_g	dB(A)	58	58	60	65	70	
	基于减速机输入法兰的最大弯矩(5)	Max. bending moment based on the gearbox input flange(5)	M_b	Nm	3	8	16	40	180	

输出轴载荷	Output shaft loads			PLPE050	PLPE070	PLPE090	PLPE120	PLPE155	p(1)
20,000 h 的径向力(6)(7)	Radial force for 20,000 h(6)(7)	$F_{r\,20.000\,h}$	N	800	1050	1900	2500	5200	
20,000 h 的轴向力(6)(7)	Axial force for 20,000 h(6)(7)	$F_{a\,20.000\,h}$		1000	1350	2000	4000	7000	
30,000 h 的径向力(6)(7)	Radial force for 30,000 h(6)(7)	$F_{r\,30.000\,h}$		700	900	1700	2150	4600	
30,000 h 的轴向力(6)(7)	Axial force for 30,000 h(6)(7)	$F_{a\,30.000\,h}$		800	1000	1500	3000	6000	
最大径向力(7)(8)	Maximum radial force(7)(8)	$F_{r\,Stat}$		1300	1650	3100	4000	8400	
最大轴向力(7)(8)	Maximum axial force(7)(8)	$F_{a\,Stat}$		1000	2100	3800	5900	11000	
20,000 h 倾斜力矩(6)(8)	Tilting moment for 20,000 h(6)(8)	$M_{K\,20.000\,h}$	Nm	26	42	99	168	497	
30,000 h 倾斜力矩(6)(8)	Tilting moment for 30,000 h(6)(8)	$M_{K\,30.000\,h}$		22	36	89	144	440	

转动惯量	Moment of inertia			PLPE050	PLPE070	PLPE090	PLPE120	PLPE155	p(1)
转动惯量(2)	Mass moment of inertia(2)	J	$kgcm^2$	0,015 - 0,030	0,069 - 0,174	0,374 - 0,789	1,419 - 2,764	4,932 - 7,611	1
				0,014 - 0,026	0,064 - 0,126	0,356 - 0,625	1,376 - 2,334	4,759 - 7,108	2

(1) 减速机级数
(2) 传动比相关的数值可在 Tec Data Finder 中检索 – www.neugart.com
(3) T_{min} = -40°C. 理想运行温度最高为 50°C
(4) 距离减速机1 m 时; 在输入转速为 n_1=3000 min^{-1} 且无负荷时测得; i=5
(5) 最大电机重量* (单位 : kg) = 0.2 x M_b / 电机长度 (单位: m)
* 电机重量对称分布
* 水平和固定的安装位置
(6) 数据以 n_2=100 min^{-1} 的输出轴转速为准。
(7) 以输出轴中心为准
(8) 更改 T_{2N}, F_r, F_a 以及周期和轴承使用寿命时, 数值存在偏差(部分较高)。利用 NCP 针对应用进行专门设计 – www.neugart.com

(1) Number of stages
(2) The ratio-dependent values can be retrieved in Tec Data Finder – www.neugart.com
(3) T_{min} = -40°C. Optimal operating temperature max. 50°C
(4) Sound pressure level from 1 m, measured on input running at n_1=3000 rpm no load; i=5
(5) Max. motor weight* in kg = 0.2 x M_b / motor length in m
* with symmetrically distributed motor weight
* with horizontal and stationary mounting
(6) These values are based on an output shaft speed of n_2=100 rpm
(7) Based on center of output shaft
(8) Other (sometimes higher) values following changes to T_{2N}, F_r, F_a, cycle, and service life of bearing. Application specific configuration with NCP – www.neugart.com

输出扭矩	Output torques			PLPE050	PLPE070	PLPE090	PLPE120	PLPE155	i(1)	p(2)
额定输出扭矩(3)(4)	Nominal output torque(3)(4)	T_{2N}	Nm	11	28	85	115	-	3	1
				15	33	90	155	460	4	
				13	30	82	172	445	5	
				8,5	25	65	135	-	7	
				6	18	50	120	-	8	
				5	15	38	95	210	10	
				12	33	97	157	-	9	2
				15	33	90	195	-	12	
				13	33	82	172	-	15	
				15	33	90	195	460	16	
				15	33	90	195	460	20	
				13	30	82	172	445	25	
				15	33	90	195	-	32	
				13	30	82	172	460	40	
				-	-	-	-	445	50	
				7,5	18	50	120	-	64	
				5	15	38	95	210	100	
最大输出扭矩(4)(5)	Max. output torque(4)(5)	T_{2max}	Nm	17,5	45	136	184	-	3	1
				24	53	144	248	736	4	
				21	48	131	275	712	5	
				13,5	40	104	216	-	7	
				9,5	29	80	192	-	8	
				8	24	61	152	336	10	
				19	53	155	251	-	9	2
				24	53	144	312	-	12	
				21	53	131	275	-	15	
				24	53	144	312	736	16	
				24	53	144	312	736	20	
				21	48	131	275	712	25	
				24	53	144	312	-	32	
				21	48	131	275	736	40	
				-	-	-	-	712	50	
				12	29	80	192	-	64	
				8	24	61	152	336	100	

(1) 传动比 ($i=n_1/n_2$)
(2) 减速机级数
(3) 利用 NCP 针对应用进行专门设计 – www.neugart.com
(4) 平键 (代码 “A”) 时的数值: 针对交变载荷
(5) 允许输出轴转动30.000转: 参见第 158 页

(1) Ratios ($i=n_1/n_2$)
(2) Number of stages
(3) Application specific configuration with NCP – www.neugart.com
(4) Values for feather key (code “A”): for repeated load
(5) 30,000 rotations of the output shaft permitted; see page 159

输出扭矩	Output torques			PLPE050	PLPE070	PLPE090	PLPE120	PLPE155	i[1]	p[2]
急停扭矩[3]	Emergency stop torque[3]	T_{2Stop}	Nm	22,5	66	180	390	-	3	1
				30	88	240	520	920	4	
				36	80	220	500	890	5	
				26	80	178	340	-	7	
				27	80	190	380	-	8	
				27	80	200	480	420	10	
				33	88	260	500	-	9	2
				40	88	240	520	-	12	
				36	88	220	500	-	15	
				40	88	240	520	920	16	
				40	88	240	520	920	20	
				36	80	220	500	890	25	
				40	88	240	520	-	32	
				36	80	220	500	920	40	
				-	-	-	-	890	50	
				27	80	190	380	-	64	
				27	80	200	480	420	100	

输入转速	Input speeds			PLPE050	PLPE070	PLPE090	PLPE120	PLPE155	i[1]	p[2]
T_{2N} 和 S1 时的平均热输入转速[4][5]	Average thermal input speed at T_{2N} and S1[4][5]	n_{1N}	min^{-1}	5000	4500[6]	3250[6]	2650[6]	-	3	1
				5000	4500[6]	3750[6]	2800[6]	1800[6]	4	
				5000	4500	4000[6]	3100[6]	2150[6]	5	
				5000	4500	4000	3500[6]	-	7	
				5000	4500	4000	3500	-	8	
				5000	4500	4000	3500	3000	10	
				5000	4500	4000[6]	3500[6]	-	9	2
				5000	4500	4000	3500[6]	-	12	
				5000	4500	4000	3500[6]	-	15	
				5000	4500	4000	3500[6]	2900[6]	16	
				5000	4500	4000	3500	3000[6]	20	
				5000	4500	4000	3500	3000[6]	25	
				5000	4500	4000	3500	-	32	
				5000	4500	4000	3500	3000	40	
				-	-	-	-	3000	50	
				5000	4500	4000	3500	-	64	
				5000	4500	4000	3500	3000	100	
最高机械输入转速[4]	Max. mechanical input speed[4]	n_{1Limit}	min^{-1}	18000	13000	7000	6500	5500		1
				18000	13000	7000	6500	5500		2

(1) 传动比 ($i=n_1/n_2$)
(2) 减速机级数
(3) 允许 1000 次
(4) 利用 NCP 针对应用设计转速 – www.neugart.com
(5) 定义请参见第 158 页
(6) 在 50% T_{2N} 输出和 S1 模式下 的平均热传动转速

(1) Ratios ($i=n_1/n_2$)
(2) Number of stages
(3) Permitted 1000 times
(4) Application-specific speed configurations with NCP – www.neugart.com
(5) See page 159 for the definition
(6) Average thermal input speed at 50% T_{2N} and S1

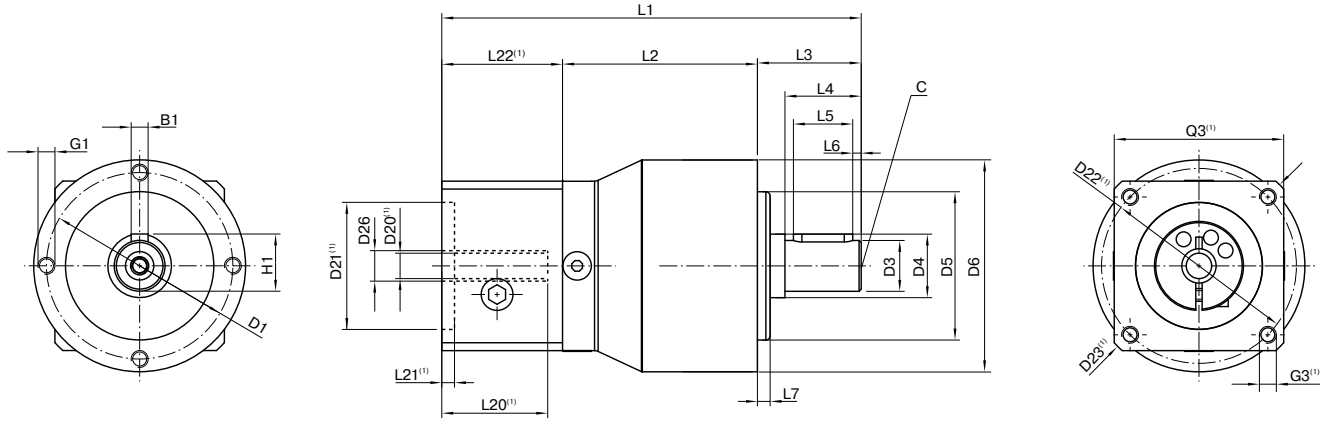

图示为带平键的 PLPE050 / 1 级 / 附带平键的输出轴 / 8 mm 锁紧系统 / 适配电机法兰 - 单一法兰 / B5 电机法兰类型
Drawing corresponds to a PLPE050 / 1-stage / output shaft with feather key / 8 mm clamping system / motor adaptation – one part / B5 flange type motor

(1)具体尺寸视电机/减速机法兰而定。可以在 www.neugart.com 下 Tec Data Finder。中针对每个电机适配电机特有的输入法兰几何尺寸。
(1) The dimensions vary with the motor/gearbox flange. The input flange dimensions can be retrieved for each specific motor in Tec Data Finder at www.neugart.com

几何尺寸(2)	Geometry(2)			PLPE050	PLPE070	PLPE090	PLPE120	PLPE155	p(3)	Code
输出端安装孔节圆直径	Pitch circle diameter output	D1		44	62	80	108	140		
输出轴直径	Shaft diameter output	D3	k7	12	16	22	32	40		
输出轴轴肩直径	Shaft collar output	D4		15	30	35	50	55		
输出端定位凸台直径	Centering diameter output	D5	h7	35	52	68	90	120		
箱体直径	Housing diameter	D6		50	70	90	120	155		
安装螺纹 x 深度	Mounting thread x depth	G1	4x	M4x8	M5x8	M6x9	M8x20	M10x20		
最小总长	Min. total length	L1		94	111	147	192	275,5	1	
				106,5	124	165	219,5	320	2	
箱体长度	Housing length	L2		46	51	67,5	76,5	100	1	
				58,5	64	85	104	144,5	2	
输出轴轴长	Shaft length output	L3		24,5	36	46	68	97		
输出端定位凸台深度	Centering depth output	L7		3	3	4	5	8		
电机轴直径 j6/k6	Motor shaft diameter j6/k6	D20		更多信息见第 155/156 页 More information on page 155/156						
输入端锁紧系统直径	Clamping system diameter input	D26								
带平键的输出轴 (DIN 6885-1)	Output shaft with feather key (DIN 6885-1)			A 4x4x14	A 5x5x25	A 6x6x32	A 10x8x50	A 12x8x70		A
平键宽度 (DIN 6885-1)	Feather key width (DIN 6885-1)	B1		4	5	6	10	12		
含平键在内的轴高 (DIN 6885-1)	Shaft height including feather key (DIN 6885-1)	H1		13,5	18	24,5	35	43		
到轴肩的距离	Shaft length from shoulder	L4		18	28	36	58	82		
平键长度	Feather key length	L5		14	25	32	50	70		
到轴端的距离	Distance from shaft end	L6		2	2	2	4	6		
中心孔 (DIN 332, DR 形)	Center hole (DIN 332, type DR)	C		M4x10	M5x12,5	M8x19	M12x28	M16x36		
光滑输出轴	Smooth output shaft									B
到轴肩的距离	Shaft length from shoulder	L4		18	28	36	58	82		

(2) 所有的尺寸单位为mm
(3) 减速机级数

(2) Dimensions in mm
(3) Number of stages

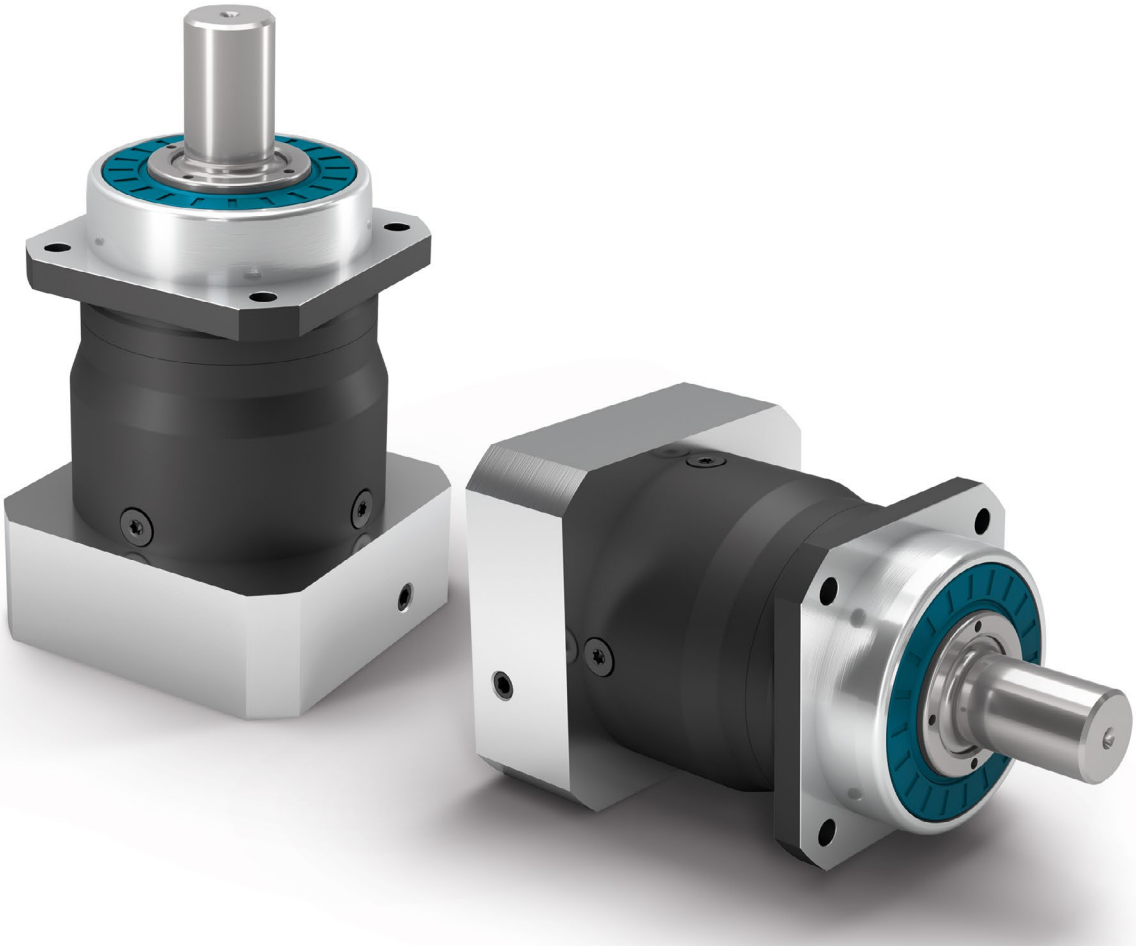

PLHE

这款行星减速机的进步之处在于：集高精度和经济性于一身

PLHE 是世界首款经济性与高精度完美结合的减速机。此款减速机配有预紧的圆锥滚子轴承，确保了很高的刚性和极佳的负载能力。我们研发的密封件能够完全防止灰尘和喷溅水进入机器内。

This is progress: In this planetary gearbox, precision and cost effectiveness meet

The **PLHE** is the world's first combination of economy and precision planetary gearboxes. The prestressed tapered roller bearings of our planetary gearboxes safeguard great stiffness even under the highest loads. The seal we have developed provides the perfect protection against dust and water jets.

额定扭矩 Nominal output torque	**15 - 260 Nm**
径向力 Radial force	**3200 - 6000 N**
轴向力 Axial force	**4400 - 8000 N**
回程间隙 Torsional backlash	**7 - 12 arcmin**
防护等级 Protection class	**IP65**

结构尺寸
Frame sizes

60 **80** **120**

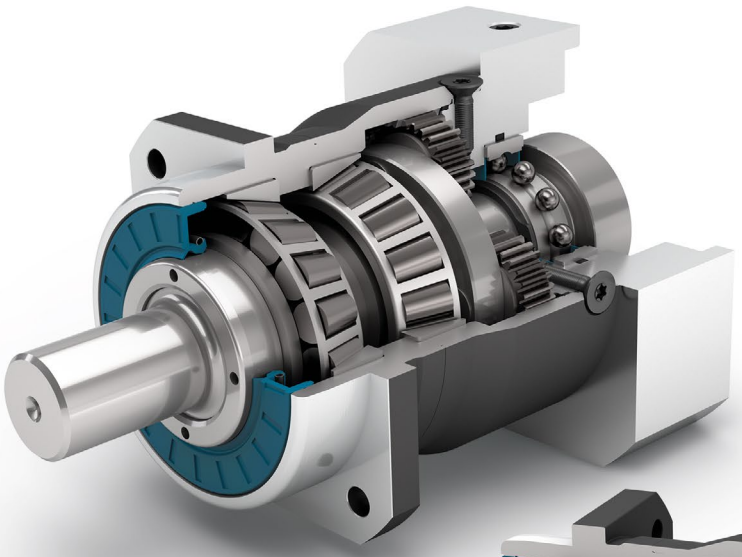

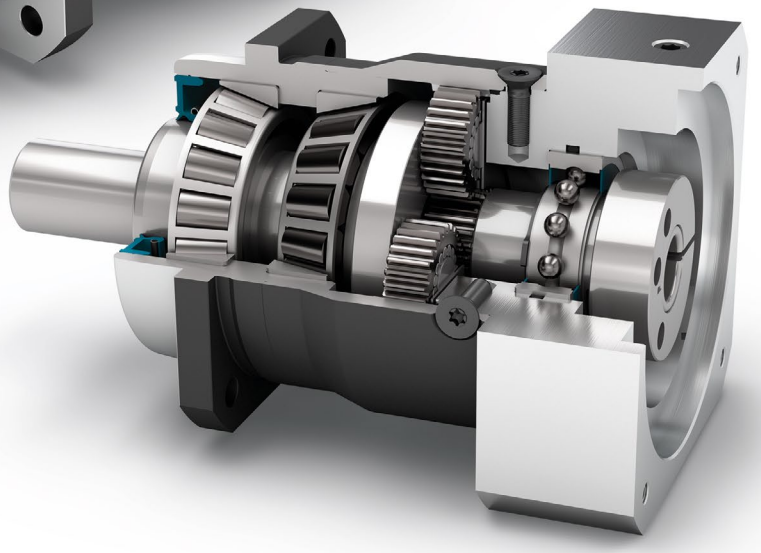

经济型
Economy Line

同轴减速机
Coaxial gearbox

旋转方向 同方向
Equidirectional rotation

直齿
Spur gear

正方形输出法兰
Square type output flange

配有预紧的圆锥滚子轴承
Preloaded tapered roller bearings

径向轴密封
Rotary shaft seal

输出端带有超长定心环
Extra long centering collar

行星齿轮架
Planet carrier in disc design

可选：花键输出轴（DIN 5480）
Option: Splined output shaft (DIN 5480)

可选：装有小齿轮的高精度减速机 140页
Option: Planetary gearbox with mounted pinion on page 140

技术特点的详细解释，请从第169页读起。
Detailed explanations of the technical features starting on page 169.

Code	减速机参数	Gearbox characteristics			PLHE060	PLHE080	PLHE120	p[1]
	使用寿命（L_{10h}）	Service life (L_{10h})	t_L	h	30.000			
	满载时效率[2]	Efficiency at full load[2]	η	%	97			1
					96			2
	最低工作温度	Min. operating temperature	T_{min}	°C	-25			
	最高工作温度	Max. operating temperature	T_{max}		90			
	防护等级	Protection class			IP65			
S	标准润滑	Standard lubrication			润滑脂（终生润滑）/ Grease (lifetime lubrication)			
F	食品级润滑	Food grade lubrication			润滑脂（终生润滑）/ Grease (lifetime lubrication)			
L	低温润滑[3]	Low temperature lubrication[3]			润滑脂（终生润滑）/ Grease (lifetime lubrication)			
	安装位置	Installation position			任意 / Any			
S	标准回程间隙	Standard backlash	j_t	arcmin	< 10	< 7	< 7	1
					< 12	< 9	< 9	2
	抗扭刚度[2]	Torsional stiffness[2]	c_g	Nm / arcmin	2,6 - 4,4	7,3 - 11,6	18,5 - 26,0	1
					2,5 - 4,6	7,3 - 12,3	16,7 - 27,5	2
	减速机重量[2]	Gearbox weight[2]	m_G	kg	1,5 - 1,6	3,0	6,8 - 7,0	1
					1,7 - 1,8	3,5 - 4,0	8,5 - 8,8	2
S	标准的箱体表面	Standard surface			箱体：钢 – 热处理后氧化（黑色） Housing: Steel – heat-treated and post-oxidized (black)			
	运行噪音[4]	Running noise[4]	Q_g	dB(A)	58	60	65	
	基于减速机输入法兰的最大弯矩[5]	Max. bending moment based on the gearbox input flange[5]	M_b	Nm	8	16	40	

输出轴载荷	Output shaft loads			PLHE060	PLHE080	PLHE120	p[1]
20,000 h 的径向力[6][7]	Radial force for 20,000 h[6][7]	$F_{r\,20.000\,h}$	N	3200	5500	6000	
20,000 h 的轴向力[6][7]	Axial force for 20,000 h[6][7]	$F_{a\,20.000\,h}$		4400	6400	8000	
30,000 h 的径向力[6][7]	Radial force for 30,000 h[6][7]	$F_{r\,30.000\,h}$		3200	4800	5400	
30,000 h 的轴向力[6][7]	Axial force for 30,000 h[6][7]	$F_{a\,30.000\,h}$		3900	5700	7000	
最大径向力[7][8]	Maximum radial force[7][8]	$F_{r\,Stat}$		3200	5500	6000	
最大轴向力[7][8]	Maximum axial force[7][8]	$F_{a\,Stat}$		4400	6400	8000	
20,000 h 倾斜力矩[6][8]	Tilting moment for 20,000 h[6][8]	$M_{K\,20.000\,h}$	Nm	191	383	488	
30,000 h 倾斜力矩[6][8]	Tilting moment for 30,000 h[6][8]	$M_{K\,30.000\,h}$		191	335	439	

转动惯量	Moment of inertia			PLHE060	PLHE080	PLHE120	p[1]
转动惯量[2]	Mass moment of inertia[2]	J	$kgcm^2$	0,069 - 0,178	0,370 - 0,775	1,390 - 2,486	1
				0,064 - 0,135	0,357 - 0,641	1,378 - 2,326	2

(1) 减速机级数
(2) 传动比相关的数值可在 Tec Data Finder 中检索 – www.neugart.com
(3) T_{min} = -40°C. 理想运行温度最高为 50°C
(4) 距离减速机1 m 时；在输入转速为 n_1=3000 min^{-1} 且无负荷时测得; i=5
(5) 最大电机重量* (单位 : kg) = 0.2 x M_b / 电机长度 (单位: m)
* 电机重量对称分布
* 水平和固定的安装位置
(6) 数据以 n_2=100 min^{-1} 的输出轴转速为准。
(7) 以输出轴中心为准
(8) 更改 T_{2N}, F_r, F_a 以及周期和轴承使用寿命时, 数值存在偏差（部分较高）。利用 NCP 针对应用进行专门设计 – www.neugart.com

(1) Number of stages
(2) The ratio-dependent values can be retrieved in Tec Data Finder – www.neugart.com
(3) T_{min} = -40°C. Optimal operating temperature max. 50°C
(4) Sound pressure level from 1 m, measured on input running at n_1=3000 rpm no load; i=5
(5) Max. motor weight* in kg = 0.2 x M_b / motor length in m
* with symmetrically distributed motor weight
* with horizontal and stationary mounting
(6) These values are based on an output shaft speed of n_2=100 rpm
(7) Based on center of output shaft
(8) Other (sometimes higher) values following changes to T_{2N}, F_r, F_a, cycle, and service life of bearing. Application specific configuration with NCP – www.neugart.com

输出扭矩	Output torques			PLHE060	PLHE080	PLHE120	i(1)	p(2)
额定输出扭矩(3)(4)	Nominal output torque(3)(4)	T_{2N}	Nm	28	85	115	3	1
				38	115	155	4	
				40	110	195	5	
				25	65	135	7	
				18	50	120	8	
				15	38	95	10	
				44	130	210	9	2
				44	120	260	12	
				44	110	230	15	
				44	120	260	16	
				44	120	260	20	
				40	110	230	25	
				44	120	260	32	
				40	110	230	40	
				18	50	120	64	
				15	38	95	100	
最大输出扭矩(4)(5)	Max. output torque(4)(5)	T_{2max}	Nm	45	136	184	3	1
				61	184	248	4	
				64	176	312	5	
				40	104	216	7	
				29	80	192	8	
				24	61	152	10	
				70	208	336	9	2
				70	192	416	12	
				70	176	368	15	
				70	192	416	16	
				70	192	416	20	
				64	176	368	25	
				70	192	416	32	
				64	176	368	40	
				29	80	192	64	
				24	61	152	100	

(1) 传动比 ($i=n_1/n_2$)
(2) 减速机级数
(3) 利用 NCP 针对应用进行专门设计 – www.neugart.com
(4) 平键 (代码 “A”) 时的数值: 针对交变载荷
(5) 允许输出轴转动30.000转; 参见第 158 页

(1) Ratios ($i=n_1/n_2$)
(2) Number of stages
(3) Application specific configuration with NCP – www.neugart.com
(4) Values for feather key (code “A”): for repeated load
(5) 30,000 rotations of the output shaft permitted; see page 159

输出扭矩	Output torques			PLHE060	PLHE080	PLHE120	i[1]	p[2]
急停扭矩[3]	Emergency stop torque[3]	T_{2Stop}	Nm	66	180	390	3	1
				88	240	520	4	
				80	220	500	5	
				80	178	340	7	
				80	190	380	8	
				80	200	480	10	
				88	260	500	9	2
				88	240	520	12	
				88	220	500	15	
				88	240	520	16	
				88	240	520	20	
				80	220	500	25	
				88	240	520	32	
				80	220	500	40	
				80	190	380	64	
				80	200	480	100	

输入转速	Input speeds			PLHE060	PLHE080	PLHE120	i[1]	p[2]
T_{2N} 和 S1 时的平均热输入转速[4][5]	Average thermal input speed at T_{2N} and S1[4][5]	n_{1N}	min^{-1}	2950[6]	2450[6]	2150[6]	3	1
				3500[6]	2700[6]	2400[6]	4	
				4200[6]	3250[6]	2600[6]	5	
				4500	4000	3500[6]	7	
				4500	4000	3500[6]	8	
				4500	4000	3500	10	
				4500[6]	4000[6]	3050[6]	9	2
				4500	4000[6]	3200[6]	12	
				4500	4000	3500[6]	15	
				4500	4000	3500[6]	16	
				4500	4000	3500[6]	20	
				4500	4000	3500	25	
				4500	4000	3500	32	
				4500	4000	3500	40	
				4500	4000	3500	64	
				4500	4000	3500	100	
最高机械输入转速[4]	Max. mechanical input speed[4]	n_{1Limit}	min^{-1}	13000	7000	6500		1
				13000	7000	6500		2

(1) 传动比 ($i=n_1/n_2$)
(2) 减速机级数
(3) 允许 1000 次
(4) 利用 NCP 针对应用设计转速 – www.neugart.com
(5) 定义请参见第 158 页
(6) 在 50% T_{2N} 输出和 S1 模式下 的平均热传动转速

(1) Ratios ($i=n_1/n_2$)
(2) Number of stages
(3) Permitted 1000 times
(4) Application-specific speed configurations with NCP – www.neugart.com
(5) See page 159 for the definition
(6) Average thermal input speed at 50% T_{2N} and S1

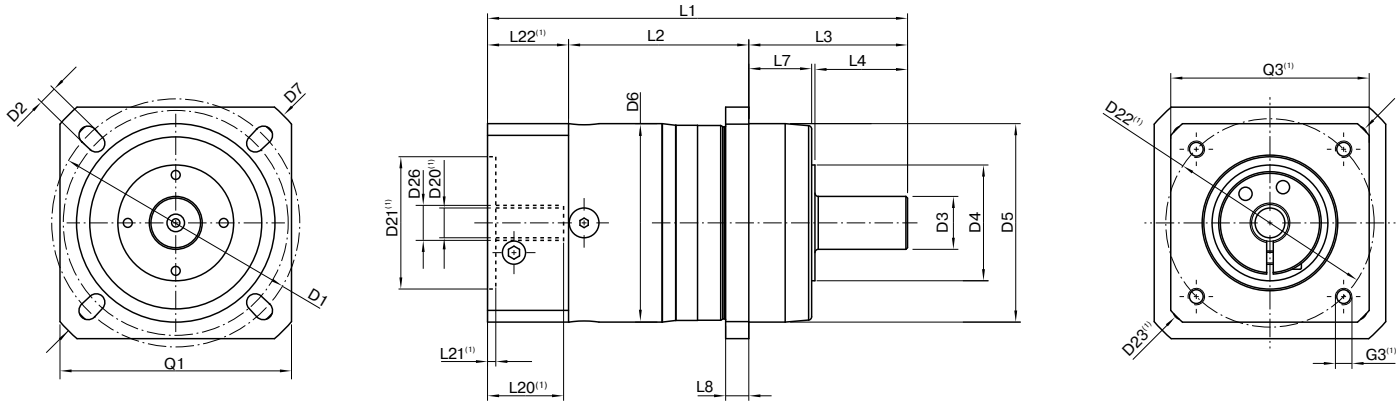

图示为带平键的 PLHE060 / 1 级 / 光滑输出轴 / 11 mm 锁紧系统 / 适配电机法兰 – 单一法兰 / B5 电机法兰类型
Drawing corresponds to a PLHE060 / 1-stage / smooth output shaft / 11 mm clamping system / motor adaptation – one part / B5 flange type motor

(1) 具体尺寸视电机/减速机法兰而定。可以在 www.neugart.com 下 Tec Data Finder。中针对每个电机适配电机特有的输入法兰几何尺寸。
(1) The dimensions vary with the motor/gearbox flange. The input flange dimensions can be retrieved for each specific motor in Tec Data Finder at www.neugart.com

几何尺寸(2)	Geometry(2)			PLHE060	PLHE080	PLHE120	p(3)	Code
输出端安装孔节圆直径	Pitch circle diameter output	D1		68 - 75	85	120		
输出端安装孔直径	Mounting bore output	D2	4x	5,5	6,5	9,0		
输出轴直径	Shaft diameter output	D3	k6	16	22	32		
输出轴轴肩直径	Shaft collar output	D4		35	40	45		
输出端定位凸台直径	Centering diameter output	D5	g7	60	70	90		
箱体直径	Housing diameter	D6		60	80	115		
输出法兰对角线尺寸	Diagonal dimension output	D7		92	100	140		
输出端法兰外方	Flange cross section output	Q1	■	70	80	110		
最小总长	Min. total length	L1		127	159	199,5	1	
				139,5	177	227	2	
箱体长度	Housing length	L2		55	69,5	64	1	
				67,5	87	91,5	2	
输出轴轴长	Shaft length output	L3		48	56	88		
输出端定位凸台深度	Centering depth output	L7		19	17,5	28		
输出端法兰厚度	Flange thickness output	L8		7	8	10		
电机轴直径j6/k6	Motor shaft diameter j6/k6	D20		更多信息见第 155/156 页 More information on page 155/156				
输入端锁紧系统直径	Clamping system diameter input	D26						
带平键的输出轴 (DIN 6885-1)	Output shaft with feather key (DIN 6885-1)			A 5x5x25	A 6x6x28	A 10x8x50		A
平键宽度 (DIN 6885-1)	Feather key width (DIN 6885-1)	B1		5	6	10		
含平键在内的轴高 (DIN 6885-1)	Shaft height including feather key (DIN 6885-1)	H1		18	24,5	35		
到轴肩的距离	Shaft length from shoulder	L4		28	36	58		
平键长度	Feather key length	L5		25	28	50		
到轴端的距离	Distance from shaft end	L6		2	4	4		
中心孔 (DIN 332, DR 形)	Center hole (DIN 332, type DR)	C		M5x12,5	M8x19	M12x28		
光滑输出轴	Smooth output shaft							B
到轴肩的距离	Shaft length from shoulder	L4		28	36	58		
花键输出轴 (DIN 5480)	Splined output shaft (DIN 5480)			W16x0,8x18x6m	W22x1,25x16x6m	W32x1,25x24x6m		C
花键或键槽的长度	Width of gearing	L_v		15	15	15		
输出轴轴长	Shaft length output	L3		48	56	88		
到轴肩的距离	Shaft length from shoulder	L4		26	26	26		
中心孔 (DIN 332, DR 形)	Center hole (DIN 332, type DR)	C		M5x12,5	M8x19	M12x28		

(2) 所有的尺寸单位为mm
(3) 减速机级数

(2) Dimensions in mm
(3) Number of stages

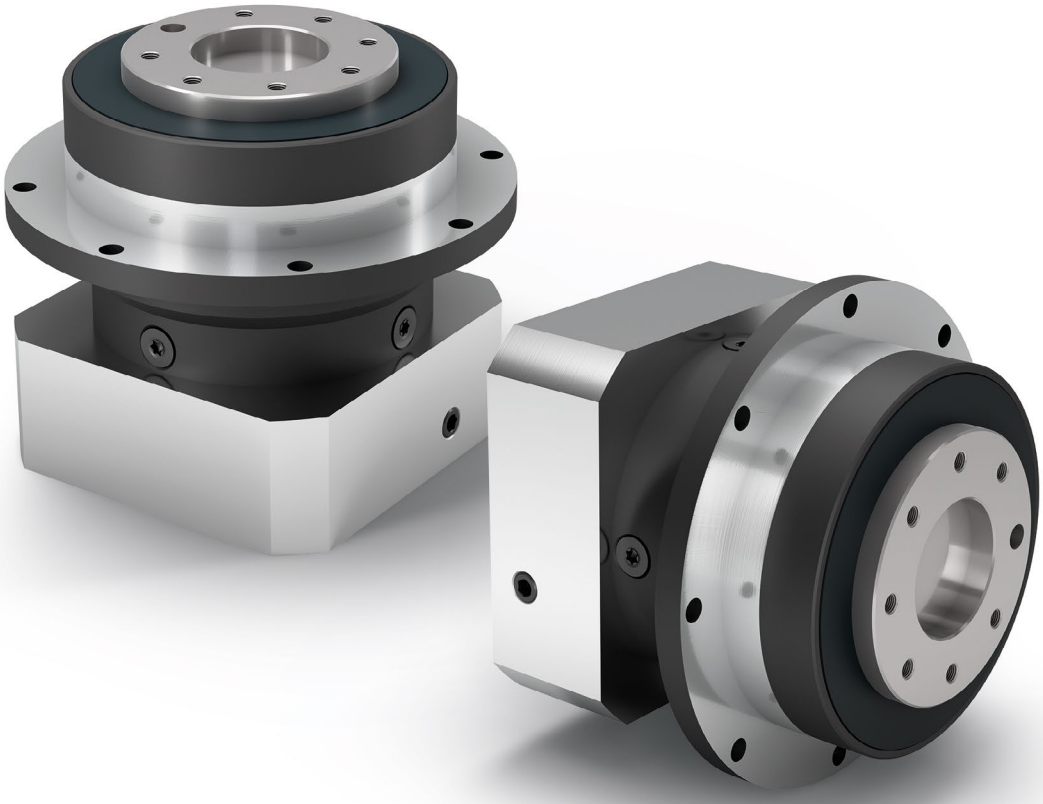

PLFE

结构最短的行星减速机
扭转刚度极高
采用法兰输出轴

前所未有的紧凑结构：**PLFE**是一款配有紧凑型法兰输出轴的行星减速机。它可以节省超过三分之一的空间而且扭转刚度显著提高。凭借其标准化的法兰接口，该行星减速机的安装极其简便。内置的定位销孔还为固定时的安全性提供了额外的保障。

The shortest planetary gearbox with the highest torsional stiffness and flange output shaft

There's no such thing as too short: The **PLFE** is our planetary gearbox with compact flange output shaft. You save more than a third of the space and gain a significantly higher torsional stiffness. Due to its standardized flange interface, it is especially easy to install. The integrated dowel hole provides additional secureness during fitting.

额定扭矩 Nominal output torque	**15 - 260 Nm**
径向力 Radial force	**550 - 2400 N**
轴向力 Axial force	**1200 - 3300 N**
回程间隙 Torsional backlash	**7 - 12 arcmin**
防护等级 Protection class	**IP54**

结构尺寸
Frame sizes

64 **90** **110**

经济型
Economy Line

同轴减速机
Coaxial gearbox

旋转方向 同方向
Equidirectional rotation

直齿
Spur gear

圆形特大号输出法兰
Extra large round type output flange

低摩擦深沟球轴承
Low-friction deep groove ball bearings

法兰输出轴（按 ISO 9409 标准）
Flange output shaft (ISO 9409)

行星齿轮架
Planet carrier in disc design

技术特点的详细解释，请从第169页读起。
Detailed explanations of the technical features starting on page 169.

Code	减速机参数	Gearbox characteristics			PLFE064	PLFE090	PLFE110	p(1)
	使用寿命（L_{10h}）	Service life (L_{10h})	t_L	h	30.000			
	满载时效率(2)	Efficiency at full load(2)	η	%	98			1
					97			2
	最低工作温度	Min. operating temperature	T_{min}	°C	-25			
	最高工作温度	Max. operating temperature	T_{max}		90			
	防护等级	Protection class			IP54			
S	标准润滑	Standard lubrication			润滑脂（终生润滑）/ Grease (lifetime lubrication)			
F	食品级润滑	Food grade lubrication			润滑脂（终生润滑）/ Grease (lifetime lubrication)			
L	低温润滑(3)	Low temperature lubrication(3)			润滑脂（终生润滑）/ Grease (lifetime lubrication)			
	安装位置	Installation position			任意 / Any			
S	标准回程间隙	Standard backlash	j_t	arcmin	< 10	< 7	< 7	1
					< 12	< 9	< 9	2
	抗扭刚度(2)	Torsional stiffness(2)	c_g	Nm / arcmin	5,5 - 11,0	16,3 - 33,5	36,0 - 72,0	1
					5,1 - 11,9	15,9 - 39,5	29,5 - 88,0	2
	减速机重量(2)	Gearbox weight(2)	m_G	kg	1,1	3,0	6,4 - 6,5	1
					1,3 - 1,4	3,4 - 3,7	8,1 - 8,5	2
S	标准的箱体表面	Standard surface			箱体：钢 – 热处理后氧化（黑色） Housing: Steel – heat-treated and post-oxidized (black)			
	运行噪音(4)	Running noise(4)	Q_g	dB(A)	58	60	65	
	基于减速机输入法兰的最大弯矩(5)	Max. bending moment based on the gearbox input flange(5)	M_b	Nm	8	16	40	

输出轴载荷	Output shaft loads			PLFE064	PLFE090	PLFE110	p(1)
20,000 h 的径向力(6)(7)	Radial force for 20,000 h(6)(7)	$F_{r\,20.000\,h}$	N	550	1400	2400	
20,000 h 的轴向力(6)(7)	Axial force for 20,000 h(6)(7)	$F_{a\,20.000\,h}$		1200	3000	3300	
30,000 h 的径向力(6)(7)	Radial force for 30,000 h(6)(7)	$F_{r\,30.000\,h}$		500	1200	2100	
30,000 h 的轴向力(6)(7)	Axial force for 30,000 h(6)(7)	$F_{a\,30.000\,h}$		1200	3000	3300	
最大径向力(7)(8)	Maximum radial force(7)(8)	$F_{r\,Stat}$		900	2200	3800	
最大轴向力(7)(8)	Maximum axial force(7)(8)	$F_{a\,Stat}$		1200	3300	5200	
20,000 h 倾斜力矩(6)(8)	Tilting moment for 20,000 h(6)(8)	$M_{K\,20.000\,h}$	Nm	12	46	109	
30,000 h 倾斜力矩(6)(8)	Tilting moment for 30,000 h(6)(8)	$M_{K\,30.000\,h}$		11	40	96	

转动惯量	Moment of inertia			PLFE064	PLFE090	PLFE110	p(1)
转动惯量(2)	Mass moment of inertia(2)	J	$kgcm^2$	0,072 - 0,210	0,406 - 1,164	1,484 - 3,430	1
				0,064 - 0,130	0,356 - 0,666	1,377 - 2,407	2

(1) 减速机级数
(2) 传动比相关的数值可在 Tec Data Finder 中检索 – www.neugart.com
(3) T_{min} = -40°C. 理想运行温度最高为 50°C
(4) 距离减速机1 m 时; 在输入转速为 n_1=3000 min^{-1} 且无负荷时测得; i=5
(5) 最大电机重量* (单位 : kg) = 0.2 x M_b / 电机长度 (单位: m)
* 电机重量对称分布
* 水平和固定的安装位置
(6) 数据以 n_2=100 min^{-1} 的输出轴转速为准。
(7) 以输出轴中心为准
(8) 更改 T_{2N}, F_r, F_a 以及周期和轴承使用寿命时, 数值存在偏差（部分较高）。利用 NCP 针对应用进行专门设计 – www.neugart.com

(1) Number of stages
(2) The ratio-dependent values can be retrieved in Tec Data Finder – www.neugart.com
(3) T_{min} = -40°C. Optimal operating temperature max. 50°C
(4) Sound pressure level from 1 m, measured on input running at n_1=3000 rpm no load; i=5
(5) Max. motor weight* in kg = 0.2 x M_b / motor length in m
* with symmetrically distributed motor weight
* with horizontal and stationary mounting
(6) These values are based on an output shaft speed of n_2=100 rpm
(7) Based on the end of the output shaft
(8) Other (sometimes higher) values following changes to T_{2N}, F_r, F_a, cycle, and service life of bearing. Application specific configuration with NCP – www.neugart.com

输出扭矩	Output torques			PLFE064	PLFE090	PLFE110	i(1)	p(2)
额定输出扭矩(3)	Nominal output torque(3)	T_{2N}	Nm	28	85	115	3	1
				38	115	155	4	
				40	110	195	5	
				25	65	135	7	
				18	50	120	8	
				15	38	95	10	
				44	130	210	9	2
				44	120	260	12	
				44	110	230	15	
				44	120	260	16	
				44	120	260	20	
				40	110	230	25	
				44	120	260	32	
				40	110	230	40	
				18	50	120	64	
				15	38	95	100	
最大输出扭矩(4)	Max. output torque(4)	T_{2max}	Nm	45	136	184	3	1
				61	184	248	4	
				64	176	312	5	
				40	104	216	7	
				29	80	192	8	
				24	61	152	10	
				70	208	336	9	2
				70	192	416	12	
				70	176	368	15	
				70	192	416	16	
				70	192	416	20	
				64	176	368	25	
				70	192	416	32	
				64	176	368	40	
				29	80	192	64	
				24	61	152	100	

(1) 传动比 ($i=n_1/n_2$)
(2) 减速机级数
(3) 利用 NCP 针对应用进行专门设计 – www.neugart.com
(4) 允许输出轴转动30.000转; 参见第 158 页

(1) Ratios ($i=n_1/n_2$)
(2) Number of stages
(3) Application specific configuration with NCP – www.neugart.com
(4) 30,000 rotations of the output shaft permitted; see page 159

输出扭矩	Output torques			PLFE064	PLFE090	PLFE110	i[1]	p[2]
急停扭矩[3]	Emergency stop torque[3]	T_{2Stop}	Nm	66	180	390	3	1
				88	240	520	4	
				80	220	500	5	
				80	178	340	7	
				80	190	380	8	
				80	200	480	10	
				88	260	500	9	2
				88	240	520	12	
				88	220	500	15	
				88	240	520	16	
				88	240	520	20	
				80	220	500	25	
				88	240	520	32	
				80	220	500	40	
				80	190	380	64	
				80	200	480	100	

输入转速	Input speeds			PLFE064	PLFE090	PLFE110	i[1]	p[2]
T_{2N} 和 S1 时的平均热输入转速[4][5]	Average thermal input speed at T_{2N} and S1[4][5]	n_{1N}	min^{-1}	3950[6]	2800[6]	2350[6]	3	1
				4500[6]	3000[6]	2550[6]	4	
				4500[6]	3550[6]	2700[6]	5	
				4500	4000	3500[6]	7	
				4500	4000	3500[6]	8	
				4500	4000	3500	10	
				4500[6]	4000[6]	2850[6]	9	2
				4500	4000[6]	3100[6]	12	
				4500	4000	3500[6]	15	
				4500	4000	3500[6]	16	
				4500	4000	3500[6]	20	
				4500	4000	3500	25	
				4500	4000	3500	32	
				4500	4000	3500	40	
				4500	4000	3500	64	
				4500	4000	3500	100	
最高机械输入转速[4]	Max. mechanical input speed[4]	n_{1Limit}	min^{-1}	13000	7000	6500		1
				13000	7000	6500		2

(1) 传动比 ($i=n_1/n_2$)
(2) 减速机级数
(3) 允许 1000 次
(4) 利用 NCP 针对应用设计转速 – www.neugart.com
(5) 定义请参见第 158 页
(6) 在 50% T_{2N} 输出和 S1 模式下 的平均热传动转速

(1) Ratios ($i=n_1/n_2$)
(2) Number of stages
(3) Permitted 1000 times
(4) Application-specific speed configurations with NCP – www.neugart.com
(5) See page 159 for the definition
(6) Average thermal input speed at 50% T_{2N} and S1

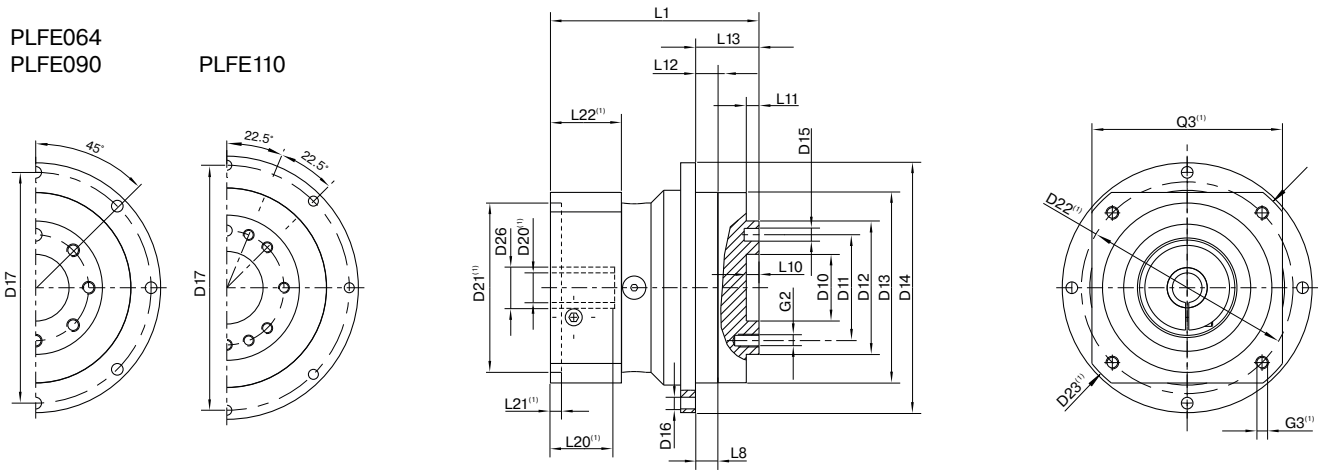

图示为带平键的 PLFE090 / 1 级 / 带有配合销孔的法兰输出轴 / 19 mm 锁紧系统 / 适配电机法兰 - 单一法兰 / B5 电机法兰类型
Drawing corresponds to a PLFE090 / 1-stage / flange output shaft with dowel hole / 19 mm clamping system / motor adaptation – one part / B5 flange type motor

(1) 具体尺寸视电机/减速机法兰而定。可以在 www.neugart.com 下 Tec Data Finder。中针对每个电机适配电机特有的输入法兰几何尺寸。
(1) The dimensions vary with the motor/gearbox flange. The input flange dimensions can be retrieved for each specific motor in Tec Data Finder at www.neugart.com

几何尺寸(2)	**Geometry(2)**			**PLFE064**	**PLFE090**	**PLFE110**	**p(3)**	**Code**
输出端定位凹槽直径	Centering diameter output shaft	D10	H7	20	31,5	40		
输出端安装孔节圆直径	Pitch circle diameter output shaft	D11		31,5	50	63		
法兰输出轴的直径	Flange output shaft diameter	D12	h7	40	63	80		
输出法兰定位凸台直径	Centering diameter output flange	D13		64	90	110		
输出法兰直径	Flange diameter output	D14		86	118	145		
输出端安装孔直径	Mounting bore output	D16		4,5 8x45°	5,5 8x45°	5,5 8x45°		
输出法兰安装孔节圆直径	Pitch circle diameter output flange	D17		79	109	135		
最小总长	Min. total length	L1		69	98,5	125,5	1	
				81,5	116	152,5	2	
输出端法兰厚度	Flange thickness output	L8		4	7	8		
输出轴定位凸台深度	Centering depth output shaft	L10		4	6	6		
		L11		3	6	6		
输出法兰定位凸台深度	Centering depth output flange	L12		7,5	10,5	10,5		
输出法兰长度	Output flange length	L13		19,5	30	29		
电机轴直径 j6/k6	Motor shaft diameter j6/k6	D20		更多信息见第 155/156 页 More information on page 155/156				
输入端锁紧系统直径	Clamping system diameter input	D26						
带有配合销孔的法兰输出轴 (EN ISO 9409-1)	Flange output shaft with dowel hole (EN ISO 9409-1)							**E**
配合销孔 x 深度	Dowel hole x depth	D15	H7	5x6	6x7	6x7		
数量 x 螺纹 x 深度	Number x thread x depth	G2		7 x M5x7	7 x M6x10	11 x M6x12		

(2) 所有的尺寸单位为mm
(3) 减速机级数

(2) Dimensions in mm
(3) Number of stages

PFHE

用于高负载的法兰输出轴式行星减速机

PFHE是一种极具吸引力的产品，适用于高径向负载应用。这种特殊的、预胀紧的角接触滚子轴承，搭配符合 EN ISO 9409-1 标准的法兰输出轴，使得 **PFHE** 的承载能力极高。借助径向轴密封，这种减速机的输出端的防护等级达到P65，因此能够胜任严苛的使用环境。

The planetary gearbox with flange output shaft for high-load applications

The **PFHE** represents an economically attractive alternative for high-load applications in which high radial loads occur. The combination of special pre-stressed inclined roller bearings and a flanged output shaft in accordance with EN ISO 9409-1 gives the **PFHE** a very high load capacity. Thanks to the radial shaft seal that is used, this gearbox achieves protection class IP65 at the output side and can therefore also withstand adverse usage conditions.

额定扭矩 Nominal output torque	**15 - 260 Nm**
径向力 Radial force	**2300 - 5150 N**
轴向力 Axial force	**2850 - 6450 N**
回程间隙 Torsional backlash	**7 - 12 arcmin**
防护等级 Protection class	**IP65**

结构尺寸
Frame sizes

64 **90** **110**

常州库克传动科技有限公司
技术服务专线：189-1589-6797
Technical Service Line www.czkuke.com

经济型
Economy Line

同轴减速机
Coaxial gearbox

旋转方向 同方向
Equidirectional rotation

直齿
Spur gear

圆形特大号输出法兰
Extra large round type output flange

配有预紧的角接触滚子轴承
Preloaded angular contact roller bearings

径向轴密封
Rotary shaft seal

法兰输出轴（按 ISO 9409 标准）
Flange output shaft (ISO 9409)

行星齿轮架
Planet carrier in disc design

可选：装有小齿轮的高精度减速机
140页
Option: Planetary gearbox with mounted pinion on page 140

技术特点的详细解释，请从第169页读起。
Detailed explanations of the technical features starting on page 169.

Code	减速机参数	Gearbox characteristics			PFHE064	PFHE090	PFHE110	p[1]
	使用寿命 (L_{10h})	Service life (L_{10h})	t_L	h	30.000			
	满载时效率[2]	Efficiency at full load[2]	η	%	97			
	最低工作温度	Min. operating temperature	T_{min}	°C	-25			
	最高工作温度	Max. operating temperature	T_{max}		90			
	防护等级	Protection class			IP65			
S	标准润滑	Standard lubrication			润滑脂（终生润滑）/ Grease (lifetime lubrication)			
F	食品级润滑	Food grade lubrication			润滑脂（终生润滑）/ Grease (lifetime lubrication)			
L	低温润滑[3]	Low temperature lubrication[3]			润滑脂（终生润滑）/ Grease (lifetime lubrication)			
	安装位置	Installation position			任意 / Any			
S	标准回程间隙	Standard backlash	j_t	arcmin	< 10	< 7	< 7	1
					< 12	< 9	< 9	2
	抗扭刚度[2]	Torsional stiffness[2]	c_g	Nm / arcmin	5,4 - 10,6	16,1 - 32,5	37,0 - 77,0	1
					5,0 - 11,5	15,7 - 38,5	30,0 - 95,0	2
	减速机重量[2]	Gearbox weight[2]	m_G	kg	1,1	3,1	5,9 - 6,0	1
					1,3 - 1,4	3,5 - 3,8	7,6 - 7,9	2
S	标准的箱体表面	Standard surface			箱体:钢 – 热处理后氧化（黑色） Housing: Steel – heat-treated and post-oxidized (black)			
	运行噪音[4]	Running noise[4]	Q_g	dB(A)	60	62	65	
	基于减速机输入法兰的最大弯矩[5]	Max. bending moment based on the gearbox input flange[5]	M_b	Nm	8	16	40	

输出轴载荷	Output shaft loads			PFHE064	PFHE090	PFHE110	p[1]
20,000 h 的径向力[6][7]	Radial force for 20,000 h[6][7]	$F_{r\,20.000\,h}$	N	2300	4100	5150	
20,000 h 的轴向力[6][7]	Axial force for 20,000 h[6][7]	$F_{a\,20.000\,h}$		2850	5450	6450	
30,000 h 的径向力[6][7]	Radial force for 30,000 h[6][7]	$F_{r\,30.000\,h}$		2000	3650	4550	
30,000 h 的轴向力[6][7]	Axial force for 30,000 h[6][7]	$F_{a\,30.000\,h}$		2500	4800	5600	
最大径向力[7][8]	Maximum radial force[7][8]	$F_{r\,Stat}$		2300	4100	5150	
最大轴向力[7][8]	Maximum axial force[7][8]	$F_{a\,Stat}$		2850	5450	6450	
20,000 h 倾斜力矩[6][8]	Tilting moment for 20,000 h[6][8]	$M_{K\,20.000\,h}$	Nm	110	278	407	
30,000 h 倾斜力矩[6][8]	Tilting moment for 30,000 h[6][8]	$M_{K\,30.000\,h}$		96	248	360	

转动惯量	Moment of inertia			PFHE064	PFHE090	PFHE110	p[1]
转动惯量[2]	Mass moment of inertia[2]	J	$kgcm^2$	0,073 - 0,224	0,407 - 1,170	1,505 - 3,658	1
				0,064 - 0,132	0,356 - 0,667	1,377 - 2,432	2

(1) 减速机级数
(2) 传动比相关的数值可在 Tec Data Finder 中检索 – www.neugart.com
(3) T_{min} = -40°C. 理想运行温度最高为 50°C
(4) 距离减速机1 m 时; 在输入转速为 n_1=3000 min^{-1} 且无负荷时测得; i=5
(5) 最大电机重量* (单位 : kg) = 0.2 x M_b / 电机长度 (单位: m)
* 电机重量对称分布
* 水平和固定的安装位置
(6) 数据以 n_2=100 min^{-1} 的输出轴转速为准。
(7) 以输出轴中心为准
(8) 更改 T_{2N}, F_r, F_a 以及周期和轴承使用寿命时, 数值存在偏差（部分较高）。利用 NCP 针对应用进行专门设计 – www.neugart.com

(1) Number of stages
(2) The ratio-dependent values can be retrieved in Tec Data Finder – www.neugart.com
(3) T_{min} = -40°C. Optimal operating temperature max. 50°C
(4) Sound pressure level from 1 m, measured on input running at n_1=3000 rpm no load; i=5
(5) Max. motor weight* in kg = 0.2 x M_b / motor length in m
* with symmetrically distributed motor weight
* with horizontal and stationary mounting
(6) These values are based on an output shaft speed of n_2=100 rpm
(7) Based on the end of the output shaft
(8) Other (sometimes higher) values following changes to T_{2N}, F_r, F_a, cycle, and service life of bearing. Application specific configuration with NCP – www.neugart.com

输出扭矩	Output torques			PFHE064	PFHE090	PFHE110	i[1]	p[2]
额定输出扭矩[3]	Nominal output torque[3]	T_{2N}	Nm	28	85	115	3	1
				38	115	155	4	
				40	110	195	5	
				25	65	135	7	
				18	50	120	8	
				15	38	95	10	
				44	130	210	9	2
				44	120	260	12	
				44	110	230	15	
				44	120	260	16	
				44	120	260	20	
				40	110	230	25	
				44	120	260	32	
				40	110	230	40	
				18	50	120	64	
				15	38	95	100	
最大输出扭矩[4]	Max. output torque[4]	T_{2max}	Nm	45	136	184	3	1
				61	184	248	4	
				64	176	312	5	
				40	104	216	7	
				29	80	192	8	
				24	61	152	10	
				70	208	336	9	2
				70	192	416	12	
				70	176	368	15	
				70	192	416	16	
				70	192	416	20	
				64	176	368	25	
				70	192	416	32	
				64	176	368	40	
				29	80	192	64	
				24	61	152	100	

(1) 传动比 ($i=n_1/n_2$)
(2) 减速机级数
(3) 利用 NCP 针对应用进行专门设计 – www.neugart.com
(4) 允许输出轴转动30.000转; 参见第 158 页

(1) Ratios ($i=n_1/n_2$)
(2) Number of stages
(3) Application specific configuration with NCP – www.neugart.com
(4) 30,000 rotations of the output shaft permitted; see page 159

输出扭矩	Output torques			PFHE064	PFHE090	PFHE110	i[1]	p[2]
急停扭矩[3]	Emergency stop torque[3]	T_{2Stop}	Nm	66	180	390	3	1
				88	240	520	4	
				80	220	500	5	
				80	178	340	7	
				80	190	380	8	
				80	200	480	10	
				88	260	500	9	2
				88	240	520	12	
				88	220	500	15	
				88	240	520	16	
				88	240	520	20	
				80	220	500	25	
				88	240	520	32	
				80	220	500	40	
				80	190	380	64	
				80	200	480	100	

输入转速	Input speeds			PFHE064	PFHE090	PFHE110	i[1]	p[2]
T_{2N} 和 S1 时的平均热输入转速[4][5]	Average thermal input speed at T_{2N} and S1[4][5]	n_{1N}	min^{-1}	2350[6]	1900[6]	1600[6]	3	1
				2950[6]	2200[6]	1900[6]	4	
				3550[6]	2750[6]	2200[6]	5	
				4500	4000[6]	3350[6]	7	
				4500	4000	3500[6]	8	
				4500	4000	3500	10	
				4500	4000[6]	3300[6]	9	2
				4500	4000	3500[6]	12	
				4500	4000	3500	15	
				4500	4000	3500	16	
				4500	4000	3500	20	
				4500	4000	3500	25	
				4500	4000	3500	32	
				4500	4000	3500	40	
				4500	4000	3500	64	
				4500	4000	3500	100	
最高机械输入转速[4]	Max. mechanical input speed[4]	n_{1Limit}	min^{-1}	7500	7000	6500		1
				7500	7000	6500		2

(1) 传动比 ($i=n_1/n_2$)
(2) 减速机级数
(3) 允许 1000 次
(4) 利用 NCP 针对应用设计转速 – www.neugart.com
(5) 定义请参见第 158 页
(6) 在 50% T_{2N} 输出和 S1 模式下 的平均热传动转速

(1) Ratios ($i=n_1/n_2$)
(2) Number of stages
(3) Permitted 1000 times
(4) Application-specific speed configurations with NCP – www.neugart.com
(5) See page 159 for the definition
(6) Average thermal input speed at 50% T_{2N} and S1

PFHE064
PFHE090

PFHE110

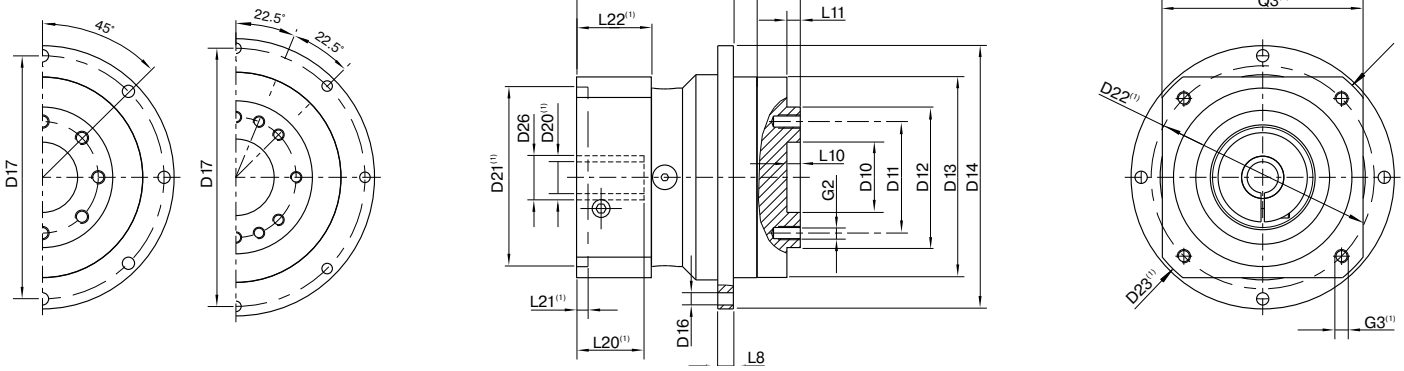

图示为带平键的 PFHE090 / 1 级 / 法兰输出轴 / 19 mm 锁紧系统 / 适配电机法兰 - 单一法兰 / B5 电机法兰类型
Drawing corresponds to a PFHE090 / 1-stage / flange output shaft / 19 mm clamping system / motor adaptation – one part / B5 flange type motor

(1) 具体尺寸视电机/减速机法兰而定。可以在 www.neugart.com 下 Tec Data Finder。中针对每个电机适配电机特有的输入法兰几何尺寸。
(1) The dimensions vary with the motor/gearbox flange. The input flange dimensions can be retrieved for each specific motor in Tec Data Finder at www.neugart.com

几何尺寸(2)	Geometry(2)			PFHE064	PFHE090	PFHE110	p(3)	Code
输出端定位凹槽直径	Centering diameter output shaft	D10	H7	20	31,5	40		
输出端安装孔节圆直径	Pitch circle diameter output shaft	D11		31,5	50	63		
法兰输出轴的直径	Flange output shaft diameter	D12	h7	40	63	80		
输出法兰定位凸台直径	Centering diameter output flange	D13		64	90	110		
输出法兰直径	Flange diameter output	D14		86	118	145		
输出端安装孔直径	Mounting bore output	D16		4,5 8x45°	5,5 8x45°	5,5 8x45°		
输出法兰安装孔节圆直径	Pitch circle diameter output flange	D17		79	109	135		
最小总长	Min. total length	L1		72	100,5	117	1	
				84,5	118	144	2	
输出端法兰厚度	Flange thickness output	L8		4	7	8		
输出轴定位凸台深度	Centering depth output shaft	L10		4	6	6		
		L11		3	6	7		
输出法兰定位凸台深度	Centering depth output flange	L12		7,5	10,5	10,5		
输出法兰长度	Output flange length	L13		19,5	30	29		
电机轴直径j6/k6	Motor shaft diameter j6/k6	D20		更多信息见第 155/156 页 More information on page 155/156				
输入端锁紧系统直径	Clamping system diameter input	D26						
法兰输出轴 (相似的 EN ISO 9409-1)	Flange output shaft (similar EN ISO 9409-1)							D
数量 x 螺纹 x 深度	Number x thread x depth	G2		8 x M5x7	8 x M6x10	12 x M6x12		

(2) 所有的尺寸单位为mm
(3) 减速机级数

(2) Dimensions in mm
(3) Number of stages

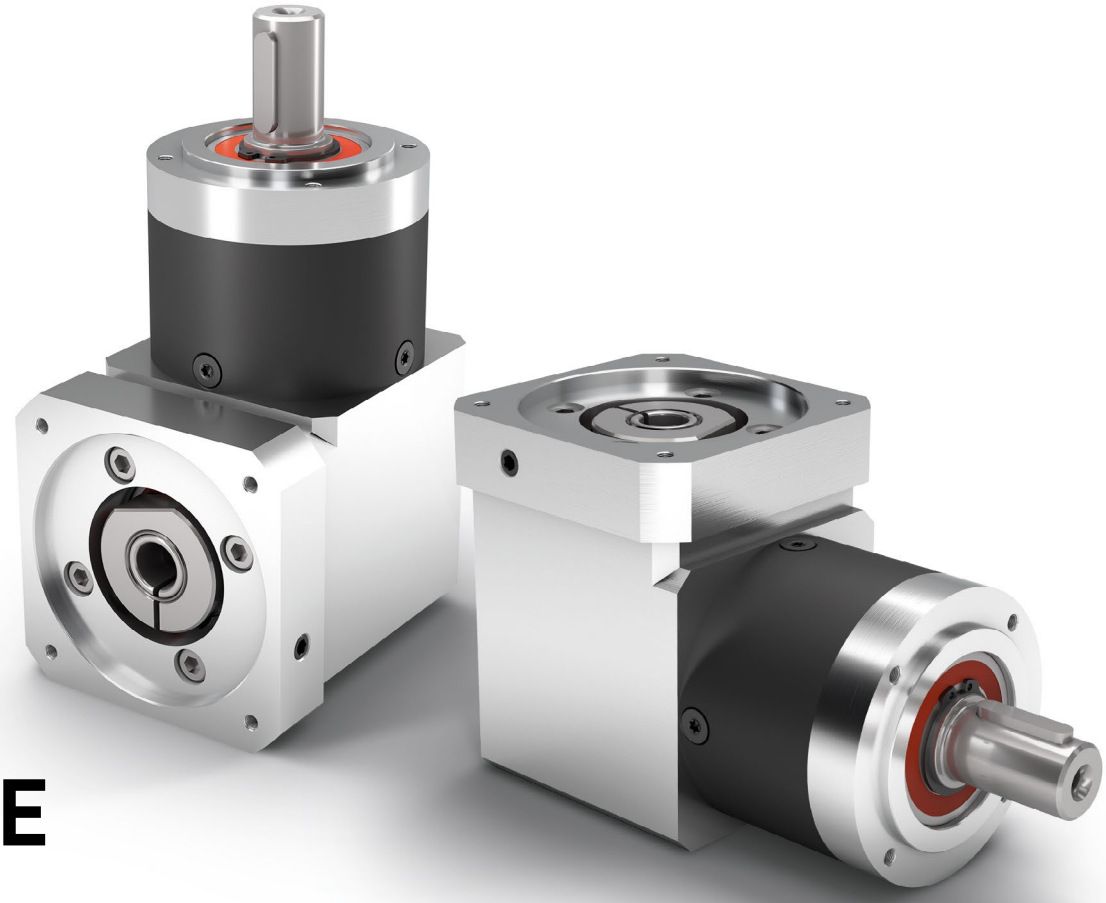

WPLE

直角行星减速机
轻巧
经济性较高

WPLE 在不断将经济型产品系列的优势发扬光大。凭借其紧凑且有力的结构形式，它成为了动态多轴系统的理想选择。我们的直角减速机终生润滑免维护，安装时简单易操作，堪称性价比之王。

The versatile right angle planetary gearbox with lower weight and appealing cost effectiveness

The **WPLE** is a consistent continuation of the benefits offered by the Economy Line. With its compact, but powerful design, it is ideal for dynamic multiple axis systems. Our right angle gearbox features lifetime lubrication, is easy to install, all this at an unrivalled price-performance ratio.

额定扭矩 Nominal output torque	**5 - 260 Nm**
径向力 Radial force	**200 - 1750 N**
轴向力 Axial force	**200 - 2500 N**
回程间隙 Torsional backlash	**11 - 28 arcmin**
防护等级 Protection class	**IP54**

结构尺寸
Frame sizes

40 **60** **80** **120**

常州库克传动科技有限公司
技术服务专线：189-1589-6797
Technical Service Line www.czkuke.com

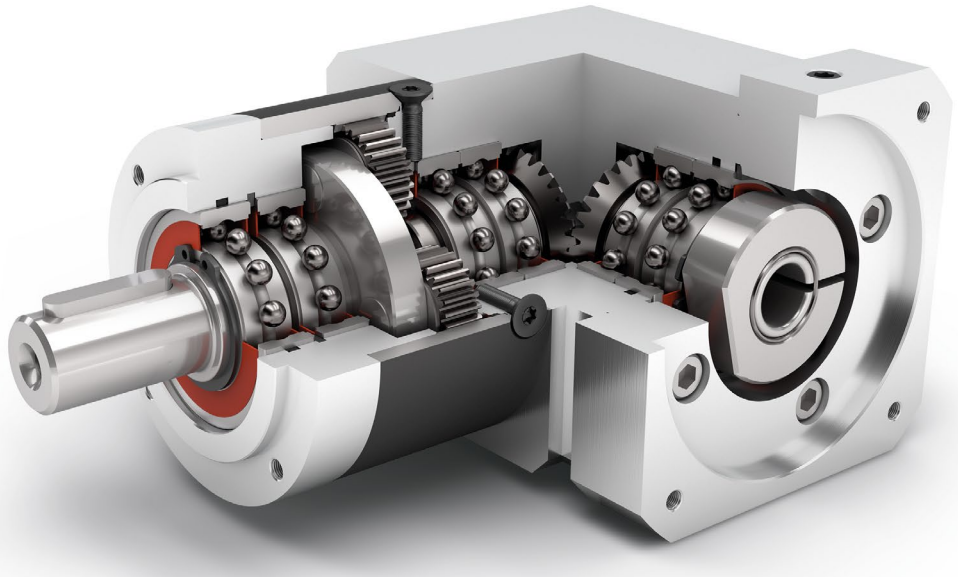

经济型
Economy Line

直角型减速机
Right angle gearbox

旋转方向 同方向
Equidirectional rotation

直齿
Spur gear

锥齿轮 直角箱
Bevel gear right angle stage

圆形输出法兰
Round type output flange

低摩擦深沟球轴承
Low-friction deep groove ball bearings

多样的传动比（i=3 至 i=512）
High ratio variety i=3 up to i=512

行星齿轮架
Planet carrier in disc design

技术特点的详细解释，请从第169页读起。
Detailed explanations of the technical features starting on page 169.

Code	减速机参数	Gearbox characteristics			WPLE040	WPLE060	WPLE080	WPLE120	p[1]
	使用寿命（L_{10h}）	Service life (L_{10h})	t_L	h	20.000				
	T_{2N} x 0, 88 时的使用寿命	Service life at T_{2N} x 0,88			30.000				
	满载时效率[2]	Efficiency at full load[2]	η	%	95				1
					94				2
					88				3
	最低工作温度	Min. operating temperature	T_{min}	°C	-25				
	最高工作温度	Max. operating temperature	T_{max}		90				
	防护等级	Protection class			IP54				
S	标准润滑	Standard lubrication			润滑脂（终生润滑）/ Grease (lifetime lubrication)				
F	食品级润滑	Food grade lubrication			润滑脂（终生润滑）/ Grease (lifetime lubrication)				
L	低温润滑[3]	Low temperature lubrication[3]			润滑脂（终生润滑）/ Grease (lifetime lubrication)				
	安装位置	Installation position			任意 / Any				
S	标准回程间隙	Standard backlash	j_t	arcmin	< 21	< 16	< 13	< 11	1
					< 25	< 18	< 15	< 13	2
					< 28	< 21	< 17	< 15	3
	抗扭刚度[2]	Torsional stiffness[2]	c_g	Nm / arcmin	0,5 - 0,8	1,5 - 2,3	4,0 - 7,9	9,9 - 17,5	1
					0,7 - 1,0	2,2 - 2,7	6,9 - 9,6	16,4 - 20,5	2
					0,8 - 1,0	2,3 - 2,8	7,9 - 10,4	17,5 - 22,0	3
	减速机重量[2]	Gearbox weight[2]	m_G	kg	0,6	1,6	3,7	9,6 - 9,8	1
					0,7	1,8	4,1 - 4,2	11,4 - 11,6	2
					0,7 - 0,8	2,0	4,6 - 4,7	13,2 - 13,4	3
S	标准的箱体表面	Standard surface			箱体：钢 – 热处理后氧化（黑色） Housing: Steel – heat-treated and post-oxidized (black)				
	运行噪音[4]	Running noise[4]	Q_g	dB(A)	68	70	73	75	
	基于减速机输入法兰的最大弯矩[5]	Max. bending moment based on the gearbox input flange[5]	M_b	Nm	2	5	10,5	26	

输出轴载荷	Output shaft loads			WPLE040	WPLE060	WPLE080	WPLE120	p[1]
20,000 h 的径向力[6][7]	Radial force for 20,000 h[6][7]	$F_{r\,20.000\,h}$	N	200	400	750	1750	
20,000 h 的轴向力[6][7]	Axial force for 20,000 h[6][7]	$F_{a\,20.000\,h}$		200	500	1000	2500	
30,000 h 的径向力[6][7]	Radial force for 30,000 h[6][7]	$F_{r\,30.000\,h}$		160	340	650	1500	
30,000 h 的轴向力[6][7]	Axial force for 30,000 h[6][7]	$F_{a\,30.000\,h}$		160	450	900	2100	
最大径向力[7][8]	Maximum radial force[7][8]	$F_{r\,Stat}$		200	700	1250	2000	
最大轴向力[7][8]	Maximum axial force[7][8]	$F_{a\,Stat}$		240	800	1600	3800	
20,000 h 倾斜力矩[6][8]	Tilting moment for 20,000 h[6][8]	$M_{K\,20.000\,h}$	Nm	5	14	31	101	
30,000 h 倾斜力矩[6][8]	Tilting moment for 30,000 h[6][8]	$M_{K\,30.000\,h}$		4	12	27	86	

转动惯量	Moment of inertia			WPLE040	WPLE060	WPLE080	WPLE120	p[1]
转动惯量[2]	Mass moment of inertia[2]	J	$kgcm^2$	0,032 - 0,049	0,221 - 0,357	0,910 - 1,273	1,820 - 2,846	1
				0,032 - 0,048	0,222 - 0,350	0,916 - 1,232	1,855 - 2,773	2
				0,032 - 0,047	0,222 - 0,232	0,916 - 1,209	1,854 - 2,681	3

(1) 减速机级数
(2) 传动比相关的数值可在 Tec Data Finder 中检索 – www.neugart.com
(3) T_{min} = -40°C. 理想运行温度最高为 50°C
(4) 距离减速机1 m 时; 在输入转速为 n_1=3000 min^{-1} 且无负荷时测得; i=5
(5) 最大电机重量* (单位 : kg) = 0.2 x M_b / 电机长度 (单位: m)
* 电机重量对称分布
* 水平和固定的安装位置
(6) 数据以 n_2=100 min^{-1} 的输出轴转速为准。
(7) 以输出轴中心为准
(8) 更改 T_{2N}, F_r, F_a 以及周期和轴承使用寿命时; 数值存在偏差（部分较高）。
利用 NCP 针对应用进行专门设计 – www.neugart.com

(1) Number of stages
(2) The ratio-dependent values can be retrieved in Tec Data Finder – www.neugart.com
(3) T_{min} = -40°C. Optimal operating temperature max. 50°C
(4) Sound pressure level from 1 m, measured on input running at n_1=3000 rpm no load; i=5
(5) Max. motor weight* in kg = 0.2 x M_b / motor length in m
* with symmetrically distributed motor weight
* with horizontal and stationary mounting
(6) These values are based on an output shaft speed of n_2=100 rpm
(7) Based on center of output shaft
(8) Other (sometimes higher) values following changes to T_{2N}, F_r, F_a, cycle, and service life of bearing. Application specific configuration with NCP – www.neugart.com

输出扭矩	Output torques			WPLE040	WPLE060	WPLE080	WPLE120	i[1]	p[2]
额定输出扭矩[3][4]	Nominal output torque[3][4]	T_{2N}	Nm	4,5	14	40[5]	80[5]	3	1
				6	19	53[5]	105[5]	4	
				7,5	24	67[5]	130[5]	5	
				8,5	25	65	135	7	
				6	18	50	120	8	
				5	15	38	95	10	
				16,5[5]	44[5]	130[5]	210[5]	9	2
				20[5]	44	120[5]	260[5]	12	
				18[5]	44	110	230	15	
				20[5]	44	120	260	16	
				20[5]	44	120	260	20	
				18	40	110	230	25	
				20	44	120	260	32	
				18	40	110	230	40	
				7,5	18	50	120	64	
				20	44	110	260	60	3
				20	44	120	260	80	
				20	44	120	260	100	
				18	44	110	230	120	
				20	44	120	260	160	
				18	40	110	230	200	
				20	44	120	260	256	
				18	40	110	230	320	
				7,5	18	50	120	512	
最大输出扭矩[4][6]	Max. output torque[4][6]	T_{2max}	Nm	7	22	64	128	3	1
				10	30	85	168	4	
				12	38	107	208	5	
				13,5	40	104	216	7	
				10	29	80	192	8	
				8	24	61	152	10	
				26	70	208	336	9	2
				32	70	192	416	12	
				29	70	176	368	15	
				32	70	192	416	16	
				32	70	192	416	20	
				29	64	176	368	25	
				32	70	192	416	32	
				29	64	176	368	40	
				12	29	80	192	64	
				32	70	176	416	60	3
				32	70	192	416	80	
				32	70	192	416	100	
				29	70	176	368	120	
				32	70	192	416	160	
				29	64	176	368	200	
				32	70	192	416	256	
				29	64	176	368	320	
				12	29	80	192	512	

(1) 传动比 ($i=n_1/n_2$)
(2) 减速机级数
(3) 利用 NCP 针对应用进行专门设计 – www.neugart.com
(4) 平键 (代码 “A”)时的数值: 针对交变载荷
(5) T_{2N} 作用时 寿命不是10.000 h
(6) 允许输出轴转动30.000转; 参见第 158 页

(1) Ratios ($i=n_1/n_2$)
(2) Number of stages
(3) Application specific configuration with NCP – www.neugart.com
(4) Values for feather key (code “A”): for repeated load
(5) Different service life: 10,000 h at T_{2N}
(6) 30,000 rotations of the output shaft permitted; see page 159

输出扭矩	Output torques			WPLE040	WPLE060	WPLE080	WPLE120	i[1]	p[2]
急停扭矩[3]	Emergency stop torque[3]	T_{2Stop}	Nm	22,5	66	180	360	3	1
				28	86	240	474	4	
				35	80	220	500	5	
				26	80	178	340	7	
				27	80	190	380	8	
				25	70	170	430	10	
				33	88	260	500	9	2
				40	88	240	520	12	
				36	88	220	500	15	
				40	88	240	520	16	
				40	88	240	520	20	
				36	80	220	500	25	
				40	88	240	520	32	
				36	80	220	500	40	
				27	80	190	380	64	
				40	88	220	520	60	3
				40	88	240	520	80	
				40	88	240	520	100	
				36	88	220	500	120	
				40	88	240	520	160	
				36	80	220	500	200	
				40	88	240	520	256	
				36	80	220	500	320	
				27	80	190	380	512	

输入转速	Input speeds			WPLE040	WPLE060	WPLE080	WPLE120	i[1]	p[2]
T_{2N} 和 S1 时的平均热输入转速[4][5]	Average thermal input speed at T_{2N} and S1[4][5]	n_{1N}	min^{-1}	5000	4500[6]	3500[6]	2850[6]	3	1
				5000	4500[6]	3550[6]	2950[6]	4	
				5000	4500[6]	3600[6]	3050[6]	5	
				5000	4500	4000[6]	3500[6]	7	
				5000	4500	4000[6]	3500[6]	8	
				5000	4500	4000	3500	10	
				5000	4500[6]	3250[6]	2950[6]	9	2
				5000	4500[6]	3850[6]	3050[6]	12	
				5000	4500	4000[6]	3500[6]	15	
				5000	4500	4000[6]	3450[6]	16	
				5000	4500	4000[6]	3500[6]	20	
				5000	4500	4000	3500[6]	25	
				5000	4500	4000	3500	32	
				5000	4500	4000	3500	40	
				5000	4500	4000	3500	64	
				5000	4500	4000	3500	60	3
				5000	4500	4000	3500	80	
				5000	4500	4000	3500	100	
				5000	4500	4000	3500	120	
				5000	4500	4000	3500	160	
				5000	4500	4000	3500	200	
				5000	4500	4000	3500	256	
				5000	4500	4000	3500	320	
				5000	4500	4000	3500	512	
最高机械输入转速[4]	Max. mechanical input speed[4]	n_{1Limit}	min^{-1}	18000	13000	7000	6500		1
				18000	13000	7000	6500		2
				18000	13000	7000	6500		3

(1) 传动比 ($i=n_1/n_2$)
(2) 减速机级数
(3) 允许 1000 次
(4) 利用 NCP 针对应用设计转速 – www.neugart.com
(5) 定义请参见第 158 页
(6) 在 50% T_{2N} 输出和 S1 模式下 的平均热传动转速

(1) Ratios ($i=n_1/n_2$)
(2) Number of stages
(3) Permitted 1000 times
(4) Application-specific speed configurations with NCP – www.neugart.com
(5) See page 159 for the definition
(6) Average thermal input speed at 50% T_{2N} and S1

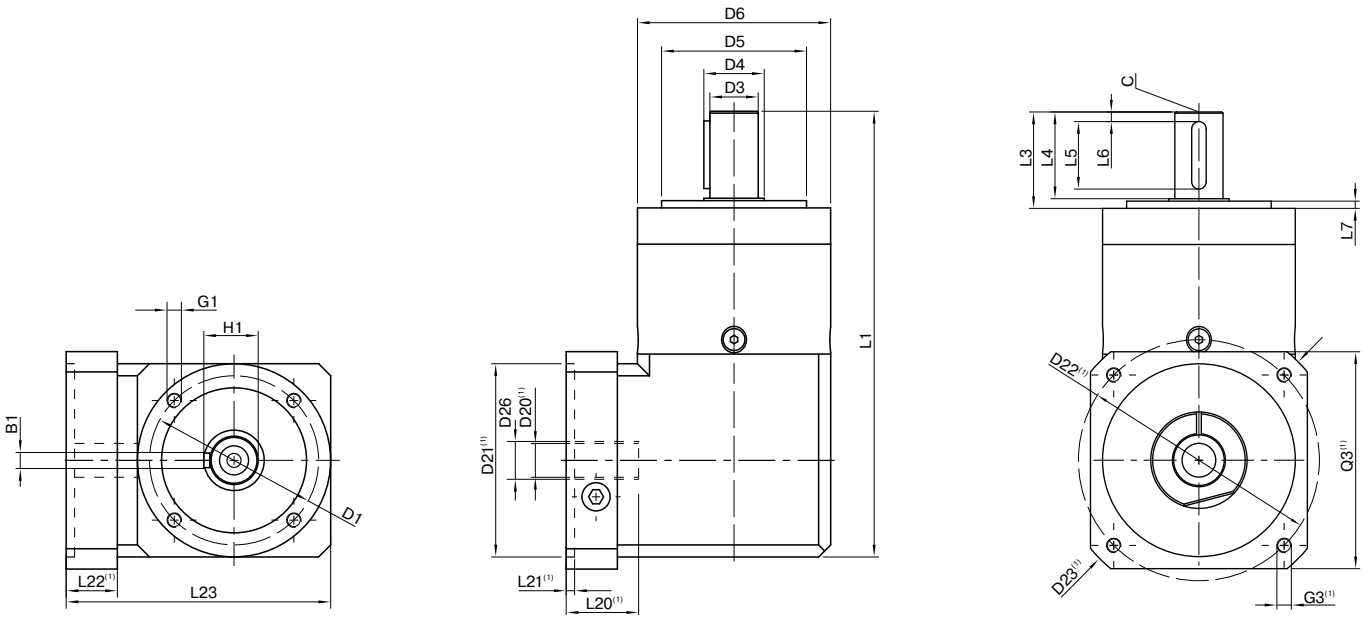

图示为带平键的 WPLE080 / 1 级 / 附带平键的输出轴 / 19 mm 锁紧系统 / 适配电机法兰– 2 件式 – 正方形通用法兰 / B5 电机法兰类型
Drawing corresponds to a WPLE080 / 1-stage / output shaft with feather key / 19 mm clamping system / motor adaptation – 2-part – square universal flange / B5 flange type motor

(1) 具体尺寸视电机/减速机法兰而定。可以在 www.neugart.com 下 Tec Data Finder。中针对每个电机适配电机特有的输入法兰几何尺寸。
(1) The dimensions vary with the motor/gearbox flange. The input flange dimensions can be retrieved for each specific motor in Tec Data Finder at www.neugart.com

几何尺寸(2)	**Geometry(2)**			**WPLE040**	**WPLE060**	**WPLE080**	**WPLE120**	**p(3)**	**Code**
输出端安装孔节圆直径	Pitch circle diameter output	D1		34	52	70	100		
输出轴直径	Shaft diameter output	D3	h7	10	14	20	25		
输出轴轴肩直径	Shaft collar output	D4		12	17	25	35		
输出端定位凸台直径	Centering diameter output	D5	h7	26	40	60	80		
箱体直径	Housing diameter	D6		40	60	80	115		
安装螺纹 x 深度	Mounting thread x depth	G1	4x	M4x6	M5x8	M6x10	M10x16		
总长	Total length	L1		110	147	184	249,5	1	
				123	159,5	201,5	277	2	
				135,5	172	219	304,5	3	
输出轴轴长	Shaft length output	L3		26	35	40	55		
输出端定位凸台深度	Centering depth output	L7		2	3	3	4		
最小总高度	Min. overall height	L23		62	85,5	109,5	145,5		
电机轴直径 j6/k6	Motor shaft diameter j6/k6	D20		更多信息见第 155/156 页 More information on page 155/156					
输入端锁紧系统直径	Clamping system diameter input	D26							
带平键的输出轴 (DIN 6885-1)	Output shaft with feather key (DIN 6885-1)			A 3x3x18	A 5x5x25	A 6x6x28	A 8x7x40		**A**
平键宽度 (DIN 6885-1)	Feather key width (DIN 6885-1)	B1		3	5	6	8		
含平键在内的轴高 (DIN 6885-1)	Shaft height including feather key (DIN 6885-1)	H1		11,2	16	22,5	28		
到轴肩的距离	Shaft length from shoulder	L4		23	30	36	50		
平键长度	Feather key length	L5		18	25	28	40		
到轴端的距离	Distance from shaft end	L6		2,5	2,5	4	5		
中心孔 (DIN 332, DR 形)	Center hole (DIN 332, type DR)	C		M3x9	M5x12,5	M6x16	M10x22		
光滑输出轴	Smooth output shaft								**B**
到轴肩的距离	Shaft length from shoulder	L4		23	30	36	50		

(2) 所有的尺寸单位为mm
(3) 减速机级数

(2) Dimensions in mm
(3) Number of stages

WPLQE

直角行星减速机，带方形通孔输出法兰安装灵活，适用于承载力很大的工况中

WPLQE 是一款配有正方形输出法兰的直角减速机。因此，其安装十分便捷，可多面使用，而且由于配有较大规格的深沟球轴承，还能承受较高的径向力和轴向力。

The right angle planetary gearbox with universal output flange – flexible installation options and for high forces

The **WPLQE** is our right angle gearbox with the square output flange. This makes it particularly easy to install for a wide range of applications, and its large deep groove ball bearings also make it ideal for high radial and axial forces.

额定扭矩 Nominal output torque	**14 - 260 Nm**
径向力 Radial force	**900 - 2950 N**
轴向力 Axial force	**1000 - 2500 N**
回程间隙 Torsional backlash	**11 - 21 arcmin**
防护等级 Protection class	**IP54**

结构尺寸
Frame sizes

60 **80** **120**

常州库克传动科技有限公司
技术服务专线：189-1589-6797
Technical Service Line www.czkuke.com

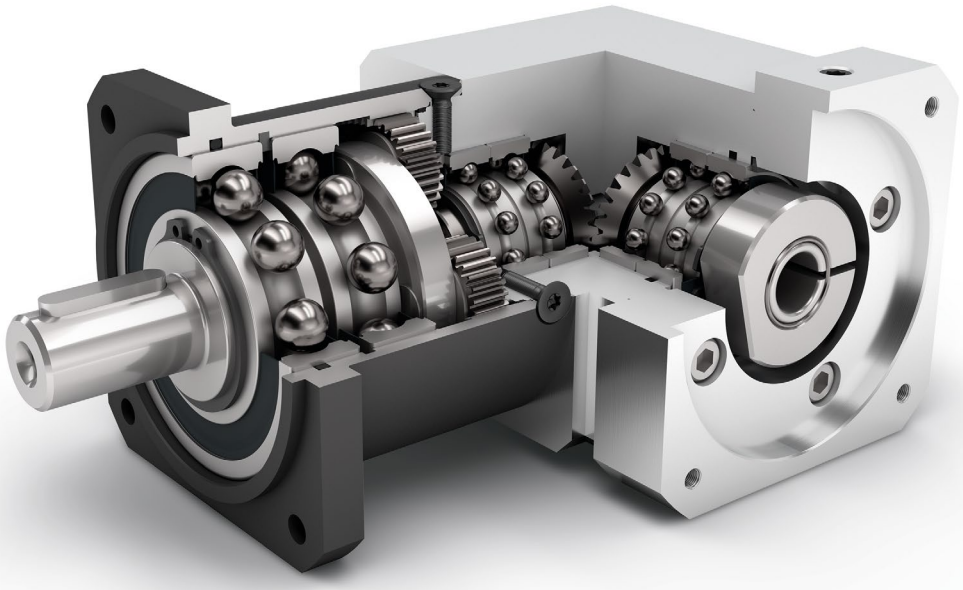

经济型
Economy Line

直角型减速机
Right angle gearbox

旋转方向 同方向
Equidirectional rotation

直齿
Spur gear

锥齿轮 直角箱
Bevel gear right angle stage

正方形输出法兰
Square type output flange

增强深沟球轴承
Reinforced deep groove ball bearings

多样的传动比（i=3 至 i=512）
High ratio variety i=3 up to i=512

行星齿轮架
Planet carrier in disc design

技术特点的详细解释，请从第169页读起。
Detailed explanations of the technical features starting on page 169.

Code	减速机参数	Gearbox characteristics			WPLQE060	WPLQE080	WPLQE120	p[1]
	使用寿命（L_{10h}）	Service life (L_{10h})	t_L	h	20.000			
	T_{2N} x 0, 88 时的使用寿命	Service life at T_{2N} x 0,88			30.000			
	满载时效率[2]	Efficiency at full load[2]	η	%	95			1
					94			2
					88			3
	最低工作温度	Min. operating temperature	T_{min}	°C	-25			
	最高工作温度	Max. operating temperature	T_{max}		90			
	防护等级	Protection class			IP54			
S	标准润滑	Standard lubrication			润滑脂（终生润滑）/ Grease (lifetime lubrication)			
F	食品级润滑	Food grade lubrication			润滑脂（终生润滑）/ Grease (lifetime lubrication)			
L	低温润滑[3]	Low temperature lubrication[3]			润滑脂（终生润滑）/ Grease (lifetime lubrication)			
	安装位置	Installation position			任意 / Any			
S	标准回程间隙	Standard backlash	j_t	arcmin	< 16	< 13	< 11	1
					< 18	< 15	< 13	2
					< 21	< 17	< 15	3
	抗扭刚度[2]	Torsional stiffness[2]	c_g	Nm / arcmin	1,9 - 3,1	4,4 - 9,4	9,3 - 15,3	1
					3,1 - 3,8	8,0 - 11,9	14,7 - 18,0	2
					3,3 - 4,1	9,4 - 13,3	15,6 - 19,0	3
	减速机重量[2]	Gearbox weight[2]	m_G	kg	1,8	4,2 - 4,5	10,4 - 10,5	1
					2,0	5,0	12,2 - 12,4	2
					2,2	5,5	14,0 - 14,2	3
S	标准的箱体表面	Standard surface			箱体：钢 – 热处理后氧化（黑色） Housing: Steel – heat-treated and post-oxidized (black)			
	运行噪音[4]	Running noise[4]	Q_g	dB(A)	70	73	75	
	基于减速机输入法兰的最大弯矩[5]	Max. bending moment based on the gearbox input flange[5]	M_b	Nm	5	10,5	26	

输出轴载荷	Output shaft loads			WPLQE060	WPLQE080	WPLQE120	p[1]
20,000 h 的径向力[6][7]	Radial force for 20,000 h[6][7]	$F_{r\,20.000\,h}$	N	900	2050	2950	
20,000 h 的轴向力[6][7]	Axial force for 20,000 h[6][7]	$F_{a\,20.000\,h}$		1000	2500	2500	
30,000 h 的径向力[6][7]	Radial force for 30,000 h[6][7]	$F_{r\,30.000\,h}$		700	1700	2400	
30,000 h 的轴向力[6][7]	Axial force for 30,000 h[6][7]	$F_{a\,30.000\,h}$		800	2000	2100	
最大径向力[7][8]	Maximum radial force[7][8]	$F_{r\,Stat}$		1500	2500	4000	
最大轴向力[7][8]	Maximum axial force[7][8]	$F_{a\,Stat}$		1950	3800	3800	
20,000 h 倾斜力矩[6][8]	Tilting moment for 20,000 h[6][8]	$M_{K\,20.000\,h}$	Nm	37	101	232	
30,000 h 倾斜力矩[6][8]	Tilting moment for 30,000 h[6][8]	$M_{K\,30.000\,h}$		29	84	188	

转动惯量	Moment of inertia			WPLQE060	WPLQE080	WPLQE120	p[1]
转动惯量[2]	Mass moment of inertia[2]	J	$kgcm^2$	0,222 - 0,370	0,921 - 1,402	1,823 - 2,878	1
				0,222 - 0,351	0,917 - 1,244	1,855 - 2,776	2
				0,222 - 0,232	0,916 - 1,210	1,854 - 2,681	3

(1) 减速机级数
(2) 传动比相关的数值可在 Tec Data Finder 中检索 – www.neugart.com
(3) T_{min} = -40°C. 理想运行温度最高为 50°C
(4) 距离减速机1 m 时; 在输入转速为 n_1=3000 min^{-1} 且无负荷时测得; i=5
(5) 最大电机重量* (单位 : kg) = 0.2 x M_b / 电机长度 (单位: m)
* 电机重量对称分布
* 水平和固定的安装位置
(6) 数据以 n_2=100 min^{-1} 的输出轴转速为准。
(7) 以输出轴中心为准
(8) 更改 T_{2N}, F_r, F_a 以及周期和轴承使用寿命时, 数值存在偏差（部分较高）。利用 NCP 针对应用进行专门设计 – www.neugart.com

(1) Number of stages
(2) The ratio-dependent values can be retrieved in Tec Data Finder – www.neugart.com
(3) T_{min} = -40°C. Optimal operating temperature max. 50°C
(4) Sound pressure level from 1 m, measured on input running at n_1=3000 rpm no load; i=5
(5) Max. motor weight* in kg = 0.2 x M_b / motor length in m
* with symmetrically distributed motor weight
* with horizontal and stationary mounting
(6) These values are based on an output shaft speed of n_2=100 rpm
(7) Based on center of output shaft
(8) Other (sometimes higher) values following changes to T_{2N}, F_r, F_a, cycle, and service life of bearing. Application specific configuration with NCP – www.neugart.com

输出扭矩	Output torques			WPLQE060	WPLQE080	WPLQE120	i[1]	p[2]
额定输出扭矩[3][4]	Nominal output torque[3][4]	T_{2N}	Nm	14	40[5]	80[5]	3	1
				19	53[5]	105[5]	4	
				24	67[5]	130[5]	5	
				25	65	135	7	
				18	50	120	8	
				15	38	95	10	
				44[5]	130[5]	210[5]	9	2
				44	120[5]	260[5]	12	
				44	110	230	15	
				44	120	260	16	
				44	120	260	20	
				40	110	230	25	
				44	120	260	32	
				40	110	230	40	
				18	50	120	64	
				44	110	260	60	3
				44	120	260	80	
				44	120	260	100	
				44	110	230	120	
				44	120	260	160	
				40	110	230	200	
				44	120	260	256	
				40	110	230	320	
				18	50	120	512	
最大输出扭矩[4][6]	Max. output torque[4][6]	T_{2max}	Nm	22	64	128	3	1
				30	85	168	4	
				38	107	208	5	
				40	104	216	7	
				29	80	192	8	
				24	61	152	10	
				70	208	336	9	2
				70	192	416	12	
				70	176	368	15	
				70	192	416	16	
				70	192	416	20	
				64	176	368	25	
				70	192	416	32	
				64	176	368	40	
				29	80	192	64	
				70	176	416	60	3
				70	192	416	80	
				70	192	416	100	
				70	176	368	120	
				70	192	416	160	
				64	176	368	200	
				70	192	416	256	
				64	176	368	320	
				29	80	192	512	

(1) 传动比 ($i=n_1/n_2$)
(2) 减速机级数
(3) 利用 NCP 针对应用进行专门设计 – www.neugart.com
(4) 平键 (代码 “A”)时的数值: 针对交变载荷
(5) T_{2N} 作用时 寿命不是10.000 h
(6) 允许输出轴转动30.000转; 参见第 158 页

(1) Ratios ($i=n_1/n_2$)
(2) Number of stages
(3) Application specific configuration with NCP – www.neugart.com
(4) Values for feather key (code “A”): for repeated load
(5) Different service life: 10,000 h at T_{2N}
(6) 30,000 rotations of the output shaft permitted; see page 159

输出扭矩	Output torques			WPLQE060	WPLQE080	WPLQE120	i[1]	p[2]
急停扭矩[3]	Emergency stop torque[3]	T_{2Stop}	Nm	66	180	360	3	1
				86	240	474	4	
				80	220	500	5	
				80	178	340	7	
				80	190	380	8	
				70	170	430	10	
				88	260	500	9	2
				88	240	520	12	
				88	220	500	15	
				88	240	520	16	
				88	240	520	20	
				80	220	500	25	
				88	240	520	32	
				80	220	500	40	
				80	190	380	64	
				88	220	520	60	3
				88	240	520	80	
				88	240	520	100	
				88	220	500	120	
				88	240	520	160	
				80	220	500	200	
				88	240	520	256	
				80	220	500	320	
				80	190	380	512	

输入转速	Input speeds			WPLQE060	WPLQE080	WPLQE120	i[1]	p[2]
T_{2N} 和 S1 时的平均热输入转速[4][5]	Average thermal input speed at T_{2N} and S1[4][5]	n_{1N}	min^{-1}	4500[6]	3100[6]	2850[6]	3	1
				4500[6]	3250[6]	2950[6]	4	
				4500[6]	3350[6]	3050[6]	5	
				4500	4000[6]	3500[6]	7	
				4500	4000[6]	3500[6]	8	
				4500	4000	3500	10	
				4500[6]	3150[6]	2950[6]	9	2
				4500[6]	3750[6]	3050[6]	12	
				4500	4000[6]	3500[6]	15	
				4500	4000[6]	3450[6]	16	
				4500	4000[6]	3500[6]	20	
				4500	4000	3500[6]	25	
				4500	4000	3500	32	
				4500	4000	3500	40	
				4500	4000	3500	64	
				4500	4000	3500	60	3
				4500	4000	3500	80	
				4500	4000	3500	100	
				4500	4000	3500	120	
				4500	4000	3500	160	
				4500	4000	3500	200	
				4500	4000	3500	256	
				4500	4000	3500	320	
				4500	4000	3500	512	
最高机械输入转速[4]	Max. mechanical input speed[4]	n_{1Limit}	min^{-1}	13000	7000	6500		1
				13000	7000	6500		2
				13000	7000	6500		3

(1) 传动比 ($i=n_1/n_2$)
(2) 减速机级数
(3) 允许 1000 次
(4) 利用 NCP 针对应用设计转速 – www.neugart.com
(5) 定义请参见第 158 页
(6) 在 50% T_{2N} 输出和 S1 模式下 的平均热传动转速

(1) Ratios ($i=n_1/n_2$)
(2) Number of stages
(3) Permitted 1000 times
(4) Application-specific speed configurations with NCP – www.neugart.com
(5) See page 159 for the definition
(6) Average thermal input speed at 50% T_{2N} and S1

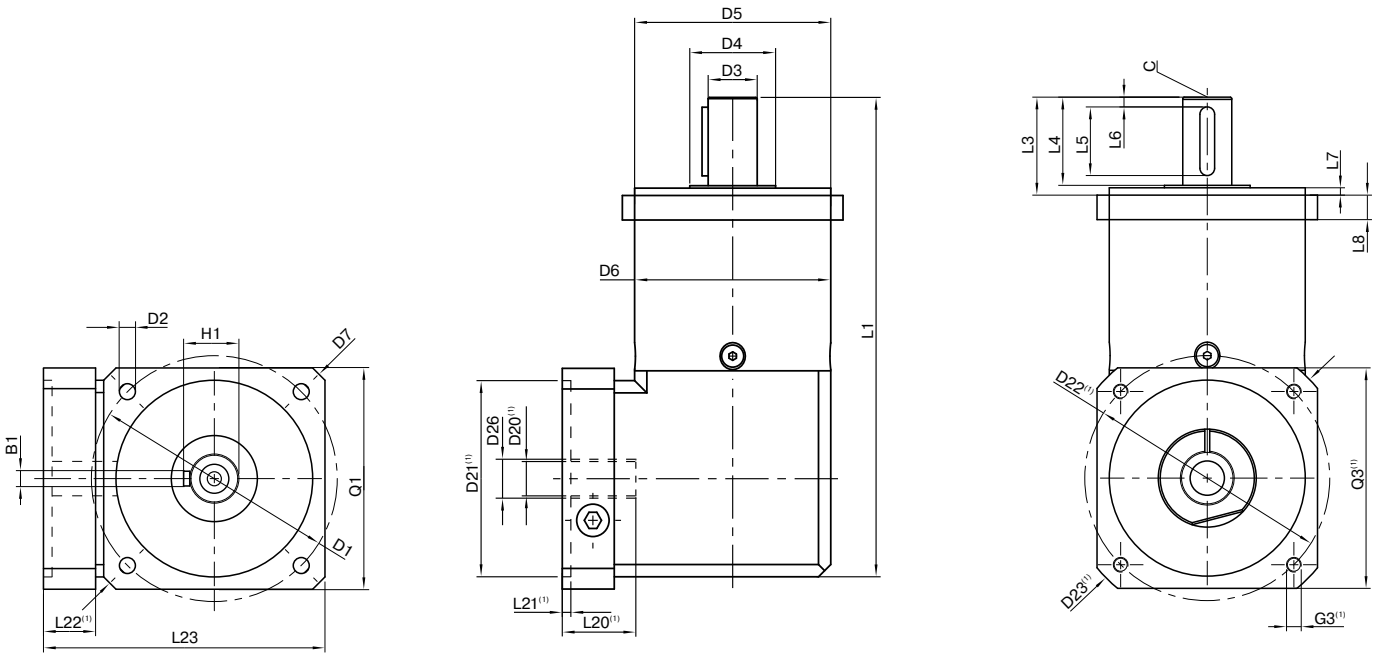

图示为带平键的 WPLQE080 / 1 级 / 附带平键的输出轴 / 19 mm 锁紧系统 / 适配电机法兰– 2 件式 – 正方形通用法兰 / B5 电机法兰类型
Drawing corresponds to a WPLQE080 / 1-stage / output shaft with feather key / 19 mm clamping system / motor adaptation – 2-part – square universal flange / B5 flange type motor

(1) 具体尺寸视电机/减速机法兰而定。可以在 www.neugart.com 下 Tec Data Finder。中针对每个电机适配电机特有的输入法兰几何尺寸。
(1) The dimensions vary with the motor/gearbox flange. The input flange dimensions can be retrieved for each specific motor in Tec Data Finder at www.neugart.com

几何尺寸(2)	Geometry(2)			WPLQE060	WPLQE080	WPLQE120	p(3)	Code
输出端安装孔节圆直径	Pitch circle diameter output	D1		75	100	130		
输出端安装孔直径	Mounting bore output	D2	4x	5,5	6,5	8,5		
输出轴直径	Shaft diameter output	D3	h7	16	20	25		
输出轴轴肩直径	Shaft collar output	D4		20	35	35		
输出端定位凸台直径	Centering diameter output	D5	h7	60	80	110		
箱体直径	Housing diameter	D6		60	80	115		
输出法兰对角线尺寸	Diagonal dimension output	D7		92	116	145		
输出端法兰外方	Flange cross section output	Q1	■	70	90	115		
总长	Total length	L1		152	195,5	274,5	1	
				164,5	213	302,5	2	
				177	230,5	330	3	
输出轴轴长	Shaft length output	L3		32	40	55		
输出端定位凸台深度	Centering depth output	L7		3	3	4		
输出端法兰厚度	Flange thickness output	L8		10	10	15		
最小总高度	Min. overall height	L23		90,5	114,5	145,5		
电机轴直径j6/k6	Motor shaft diameter j6/k6	D20		更多信息见第 155/156 页 More information on page 155/156				
输入端锁紧系统直径	Clamping system diameter input	D26						
带平键的输出轴 (DIN 6885-1)	Output shaft with feather key (DIN 6885-1)			A 5x5x20	A 6x6x28	A 8x7x40		A
平键宽度 (DIN 6885-1)	Feather key width (DIN 6885-1)	B1		5	6	8		
含平键在内的轴高 (DIN 6885-1)	Shaft height including feather key (DIN 6885-1)	H1		18	22,5	28		
到轴肩的距离	Shaft length from shoulder	L4		28	36	50		
平键长度	Feather key length	L5		20	28	40		
到轴端的距离	Distance from shaft end	L6		4	4	5		
中心孔 DIN 332, DR 形)	Center hole (DIN 332, type DR)	C		M5x12,5	M6x16	M10x22		
光滑输出轴	Smooth output shaft							B
到轴肩的距离	Shaft length from shoulder	L4		28	36	50		

(2) 所有的尺寸单位为mm
(3) 减速机级数

(2) Dimensions in mm
(3) Number of stages

WPLPE

经济型直角行星减速机，适用于承载力很大的工况中
可进行多面安装，终生润滑，免维护

这款 **WPLPE** 是我们在经济型产品领域的智能型直角式解决方案：节省空间，性能强劲，且价格十分合理。驱动元件可直接安装在输出轴上，在实际应用中获得最佳灵活度。

The economical right angle planetary gearbox for particularly high forces – flexible installation options and lifetime lubrication

The **WPLPE** is the smart right angle solution from our Economy Line: Space-saving, and yet powerful at an attractive price. You install your drive elements directly on the output shaft and extract the maximum flexibility from your application.

额定扭矩
Nominal output torque **5 - 195 Nm**

径向力
Radial force **800 - 2500 N**

轴向力
Axial force **1000 - 4000 N**

回程间隙
Torsional backlash **11 - 25 arcmin**

防护等级
Protection class **IP54**

结构尺寸
Frame sizes

50 **70** **90** **120**

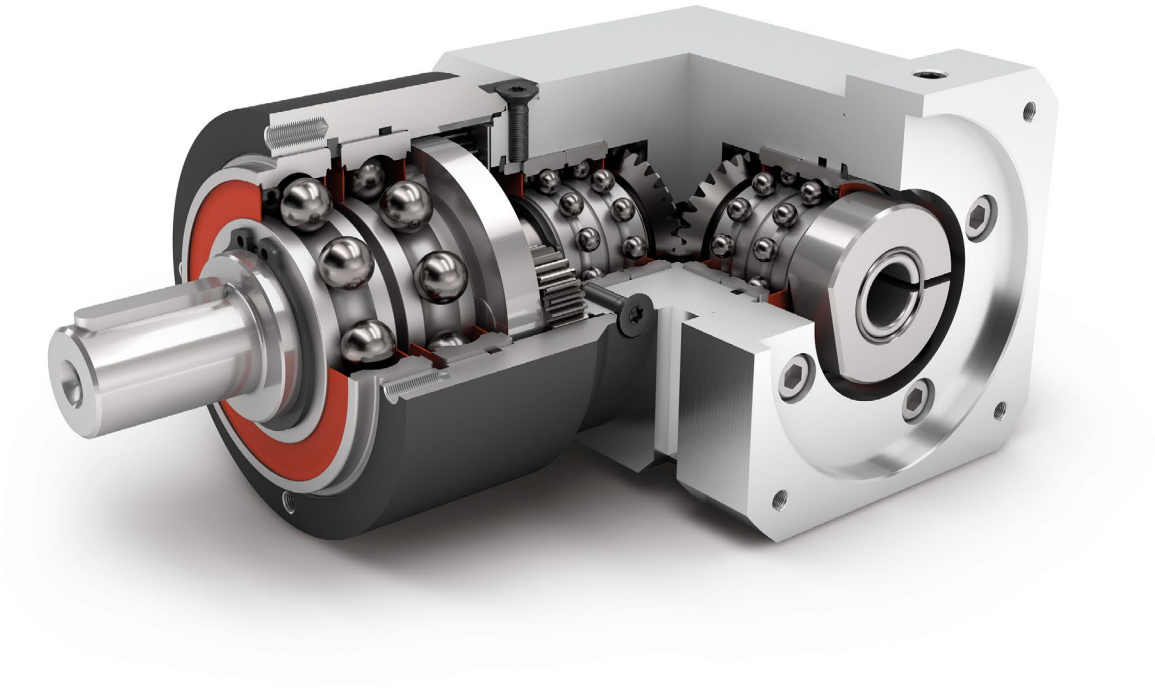

经济型
Economy Line

直角型减速机
Right angle gearbox

旋转方向 同方向
Equidirectional rotation

直齿
Spur gear

锥齿轮 直角箱
Bevel gear right angle stage

圆形输出法兰
Round type output flange

增强深沟球轴承
Reinforced deep groove ball bearings

行星齿轮架
Planet carrier in disc design

技术特点的详细解释，请从第169页读起。
Detailed explanations of the technical features starting on page 169.

Code	减速机参数	Gearbox characteristics			WPLPE050	WPLPE070	WPLPE090	WPLPE120	p[1]
	使用寿命（L_{10h}）	Service life (L_{10h})	t_L	h	20.000				
	T_{2N} x 0, 88 时的使用寿命	Service life at T_{2N} x 0,88			30.000				
	满载时效率[2]	Efficiency at full load[2]	η	%	95				1
					94				2
	最低工作温度	Min. operating temperature	T_{min}	°C	-25				
	最高工作温度	Max. operating temperature	T_{max}		90				
	防护等级	Protection class			IP54				
S	标准润滑	Standard lubrication			润滑脂（终生润滑）/ Grease (lifetime lubrication)				
F	食品级润滑	Food grade lubrication			润滑脂（终生润滑）/ Grease (lifetime lubrication)				
L	低温润滑[3]	Low temperature lubrication[3]			润滑脂（终生润滑）/ Grease (lifetime lubrication)				
	安装位置	Installation position			任意 / Any				
S	标准回程间隙	Standard backlash	j_t	arcmin	< 21	< 16	< 13	< 11	1
					< 25	< 18	< 15	< 13	2
	抗扭刚度[2]	Torsional stiffness[2]	c_g	Nm / arcmin	0,5 - 0,8	2,2 - 4,1	4,7 - 10,8	13,1 - 28,0	1
					0,7 - 1,0	3,3 - 5,3	9,0 - 14,1	19,5 - 38,5	2
	减速机重量[2]	Gearbox weight[2]	m_G	kg	0,8	2,1 - 2,2	4,8 - 4,9	11,5 - 11,6	1
					1,0 - 1,3	2,4 - 2,6	5,5 - 5,6	13,4 - 13,7	2
S	标准的箱体表面	Standard surface			箱体：钢 – 热处理后氧化（黑色） Housing: Steel – heat-treated and post-oxidized (black)				
	运行噪音[4]	Running noise[4]	Q_g	dB(A)	68	70	73	75	
	基于减速机输入法兰的最大弯矩[5]	Max. bending moment based on the gearbox input flange[5]	M_b	Nm	2	5	10,5	26	

输出轴载荷	Output shaft loads			WPLPE050	WPLPE070	WPLPE090	WPLPE120	p[1]
20,000 h 的径向力[6][7]	Radial force for 20,000 h[6][7]	$F_{r\,20.000\,h}$	N	800	1050	1900	2500	
20,000 h 的轴向力[6][7]	Axial force for 20,000 h[6][7]	$F_{a\,20.000\,h}$		1000	1350	2000	4000	
30,000 h 的径向力[6][7]	Radial force for 30,000 h[6][7]	$F_{r\,30.000\,h}$		700	900	1700	2150	
30,000 h 的轴向力[6][7]	Axial force for 30,000 h[6][7]	$F_{a\,30.000\,h}$		800	1000	1500	3000	
最大径向力[7][8]	Maximum radial force[7][8]	$F_{r\,Stat}$		1300	1650	3100	4000	
最大轴向力[7][8]	Maximum axial force[7][8]	$F_{a\,Stat}$		1000	2100	3800	5900	
20,000 h 倾斜力矩[6][8]	Tilting moment for 20,000 h[6][8]	$M_{K\,20.000\,h}$	Nm	26	42	99	168	
30,000 h 倾斜力矩[6][8]	Tilting moment for 30,000 h[6][8]	$M_{K\,30.000\,h}$		22	36	89	144	

转动惯量	Moment of inertia			WPLPE050	WPLPE070	WPLPE090	WPLPE120	p[1]
转动惯量[2]	Mass moment of inertia[2]	J	$kgcm^2$	0,032 - 0,052	0,218 - 0,329	0,925 - 1,408	1,861 - 3,248	1
				0,031 - 0,049	0,218 - 0,326	0,907 - 1,245	1,818 - 2,818	2

(1) 减速机级数
(2) 传动比相关的数值可在 Tec Data Finder 中检索 – www.neugart.com
(3) T_{min} = -40°C. 理想运行温度最高为 50°C
(4) 距离减速机1 m 时; 在输入转速为 n_1=3000 min^{-1} 且无负荷时测得; i=5
(5) 最大电机重量* (单位 : kg) = 0.2 x M_b / 电机长度 (单位: m)
* 电机重量对称分布
* 水平和固定的安装位置
(6) 数据以 n_2=100 min^{-1} 的输出轴转速为准。
(7) 以输出轴中心为准
(8) 更改 T_{2N}, F_r, F_a 以及周期和轴承使用寿命时, 数值存在偏差（部分较高）。利用 NCP 针对应用进行专门设计 – www.neugart.com

(1) Number of stages
(2) The ratio-dependent values can be retrieved in Tec Data Finder – www.neugart.com
(3) T_{min} = -40°C. Optimal operating temperature max. 50°C
(4) Sound pressure level from 1 m, measured on input running at n_1=3000 rpm no load; i=5
(5) Max. motor weight* in kg = 0.2 x M_b / motor length in m
* with symmetrically distributed motor weight
* with horizontal and stationary mounting
(6) These values are based on an output shaft speed of n_2=100 rpm
(7) Based on center of output shaft
(8) Other (sometimes higher) values following changes to T_{2N}, F_r, F_a, cycle, and service life of bearing. Application specific configuration with NCP – www.neugart.com

输出扭矩	Output torques			WPLPE050	WPLPE070	WPLPE090	WPLPE120	i[1]	p[2]
额定输出扭矩[3][4]	Nominal output torque[3][4]	T_{2N}	Nm	4,5	14	40[5]	80[5]	3	1
				6	19	53[5]	105[5]	4	
				7,5	24	67[5]	130[5]	5	
				8,5	25	65	135	7	
				6	18	50	120	8	
				5	15	38	95	10	
				12	33	97	157	9	2
				15	33	90	195	12	
				13	33	82	172	15	
				15	33	90	195	16	
				15	33	90	195	20	
				13	30	82	172	25	
				15	33	90	195	32	
				13	30	82	172	40	
				7,5	18	50	120	64	
				5	15	38	95	100	
最大输出扭矩[4][6]	Max. output torque[4][6]	T_{2max}	Nm	7	22	64	128	3	1
				10	30	85	168	4	
				12	38	107	208	5	
				13,5	40	104	216	7	
				10	29	80	192	8	
				8	24	61	152	10	
				19	53	155	251	9	2
				24	53	144	312	12	
				21	53	131	275	15	
				24	53	144	312	16	
				24	53	144	312	20	
				21	48	131	275	25	
				24	53	144	312	32	
				21	48	131	275	40	
				12	29	80	192	64	
				8	24	61	152	100	

(1) 传动比 ($i=n_1/n_2$)
(2) 减速机级数
(3) 利用 NCP 针对应用进行专门设计 – www.neugart.com
(4) 平键 (代码 "A")时的数值: 针对交变载荷
(5) T_{2N} 作用时 寿命不是10.000 h
(6) 允许输出轴转动30.000转; 参见第 158 页

(1) Ratios ($i=n_1/n_2$)
(2) Number of stages
(3) Application specific configuration with NCP – www.neugart.com
(4) Values for feather key (code "A"): for repeated load
(5) Different service life: 10,000 h at T_{2N}
(6) 30,000 rotations of the output shaft permitted; see page 159

输出扭矩	Output torques			WPLPE050	WPLPE070	WPLPE090	WPLPE120	i[1]	p[2]
急停扭矩[3]	Emergency stop torque[3]	T_{2Stop}	Nm	22,5	66	180	360	3	1
				28	86	240	474	4	
				35	80	220	500	5	
				26	80	178	340	7	
				27	80	190	380	8	
				25	70	170	430	10	
				33	88	260	500	9	2
				40	88	240	520	12	
				36	88	220	500	15	
				40	88	240	520	16	
				40	88	240	520	20	
				36	80	220	500	25	
				40	88	240	520	32	
				36	80	220	500	40	
				27	80	190	380	64	
				27	80	170	430	100	

输入转速	Input speeds			WPLPE050	WPLPE070	WPLPE090	WPLPE120	i[1]	p[2]
T_{2N} 和 S1 时的平均热输入转速[4][5]	Average thermal input speed at T_{2N} and S1[4][5]	n_{1N}	min^{-1}	5000	4200[6]	3000[6]	2350[6]	3	1
				5000	4500[6]	3150[6]	2450[6]	4	
				5000	4500[6]	3250[6]	2600[6]	5	
				5000	4500[6]	3950[6]	3100[6]	7	
				5000	4500	4000[6]	3450[6]	8	
				5000	4500	4000	3500[6]	10	
				5000	4500[6]	3500[6]	2950[6]	9	2
				5000	4500	4000[6]	3050[6]	12	
				5000	4500	4000[6]	3450[6]	15	
				5000	4500	4000[6]	3450[6]	16	
				5000	4500	4000[6]	3500[6]	20	
				5000	4500	4000	3500[6]	25	
				5000	4500	4000	3500	32	
				5000	4500	4000	3500	40	
				5000	4500	4000	3500	64	
				5000	4500	4000	3500	100	
最高机械输入转速[4]	Max. mechanical input speed[4]	n_{1Limit}	min^{-1}	18000	13000	7000	6500		1
				18000	13000	7000	6500		2

(1) 传动比 ($i=n_1/n_2$)
(2) 减速机级数
(3) 允许 1000 次
(4) 利用 NCP 针对应用设计转速 – www.neugart.com
(5) 定义请参见第 158 页
(6) 在 50% T_{2N} 输出和 S1 模式下 的平均热传动转速

(1) Ratios ($i=n_1/n_2$)
(2) Number of stages
(3) Permitted 1000 times
(4) Application-specific speed configurations with NCP – www.neugart.com
(5) See page 159 for the definition
(6) Average thermal input speed at 50% T_{2N} and S1

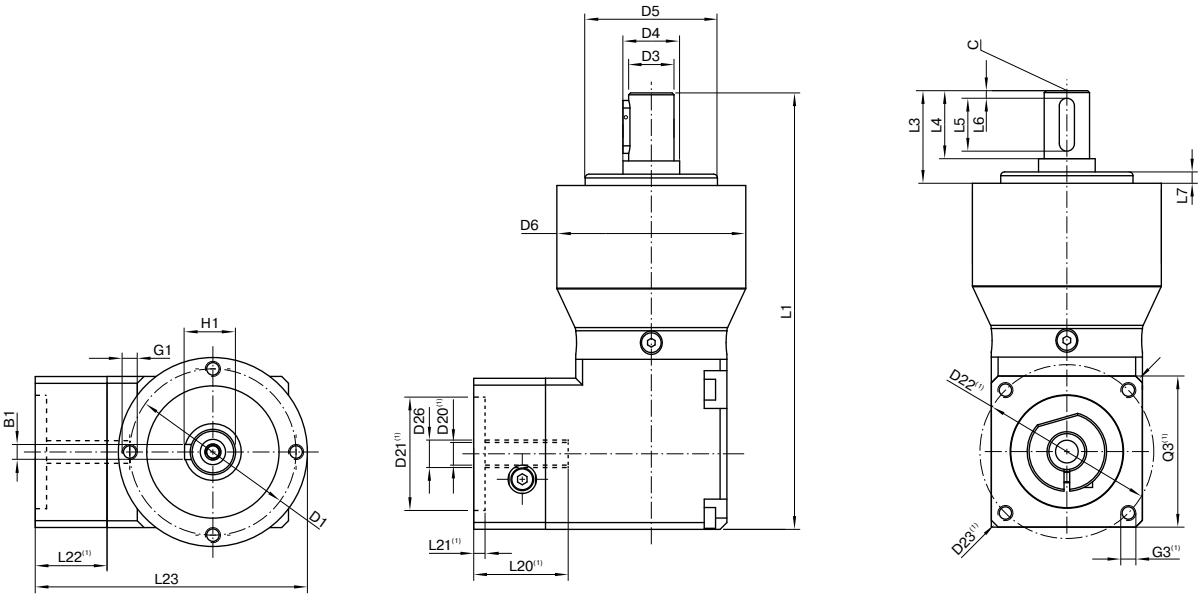

图示为带平键的 WPLPE090 / 1 级 / 附带平键的输出轴 / 19 mm 锁紧系统 / 适配电机法兰– 2 件式 – 正方形通用法兰 / B5 电机法兰类型
Drawing corresponds to a WPLPE090 / 1-stage / output shaft with feather key / 19 mm clamping system / motor adaptation – 2-part – square universal flange / B5 flange type motor

(1) 具体尺寸视电机/减速机法兰而定。可以在 www.neugart.com 下 Tec Data Finder。中针对每个电机适配电机特有的输入法兰几何尺寸。
(1) The dimensions vary with the motor/gearbox flange. The input flange dimensions can be retrieved for each specific motor in Tec Data Finder at www.neugart.com

几何尺寸(2)	Geometry(2)			WPLPE050	WPLPE070	WPLPE090	WPLPE120	p(3)	Code
输出端安装孔节圆直径	Pitch circle diameter output	D1		44	62	80	108		
输出轴直径	Shaft diameter output	D3	k7	12	16	22	32		
输出轴轴肩直径	Shaft collar output	D4		15	30	35	50		
输出端定位凸台直径	Centering diameter output	D5	h7	35	52	68	90		
箱体直径	Housing diameter	D6		50	70	90	120		
安装螺纹 x 深度	Mounting thread x depth	G1	4x	M4x8	M5x8	M6x9	M8x20		
总长	Total length	L1		115,5	152,5	197,5	265	1	
				128	165,5	215,5	292,5	2	
输出轴轴长	Shaft length output	L3		24,5	36	46	68		
输出端定位凸台深度	Centering depth output	L7		3	3	4	5		
最小总高度	Min. overall height	L23		67	90,5	114,5	148		
电机轴直径j6/k6	Motor shaft diameter j6/k6	D20		更多信息见第 155/156 页 More information on page 155/156					
输入端锁紧系统直径	Clamping system diameter input	D26							
带平键的输出轴 (DIN 6885-1)	Output shaft with feather key (DIN 6885-1)			A 4x4x14	A 5x5x25	A 6x6x32	A 10x8x50		A
平键宽度 (DIN 6885-1)	Feather key width (DIN 6885-1)	B1		4	5	6	10		
含平键在内的轴高 (DIN 6885-1)	Shaft height including feather key (DIN 6885-1)	H1		13,5	18	24,5	35		
到轴肩的距离	Shaft length from shoulder	L4		18	28	36	58		
平键长度	Feather key length	L5		14	25	32	50		
到轴端的距离	Distance from shaft end	L6		2	2	2	4		
中心孔 (DIN 332, DR 形)	Center hole (DIN 332, type DR)	C		M4x10	M5x12,5	M8x19	M12x28		
光滑输出轴	Smooth output shaft								B
到轴肩的距离	Shaft length from shoulder	L4		18	28	36	58		

(2) 所有的尺寸单位为mm
(3) 减速机级数

(2) Dimensions in mm
(3) Number of stages

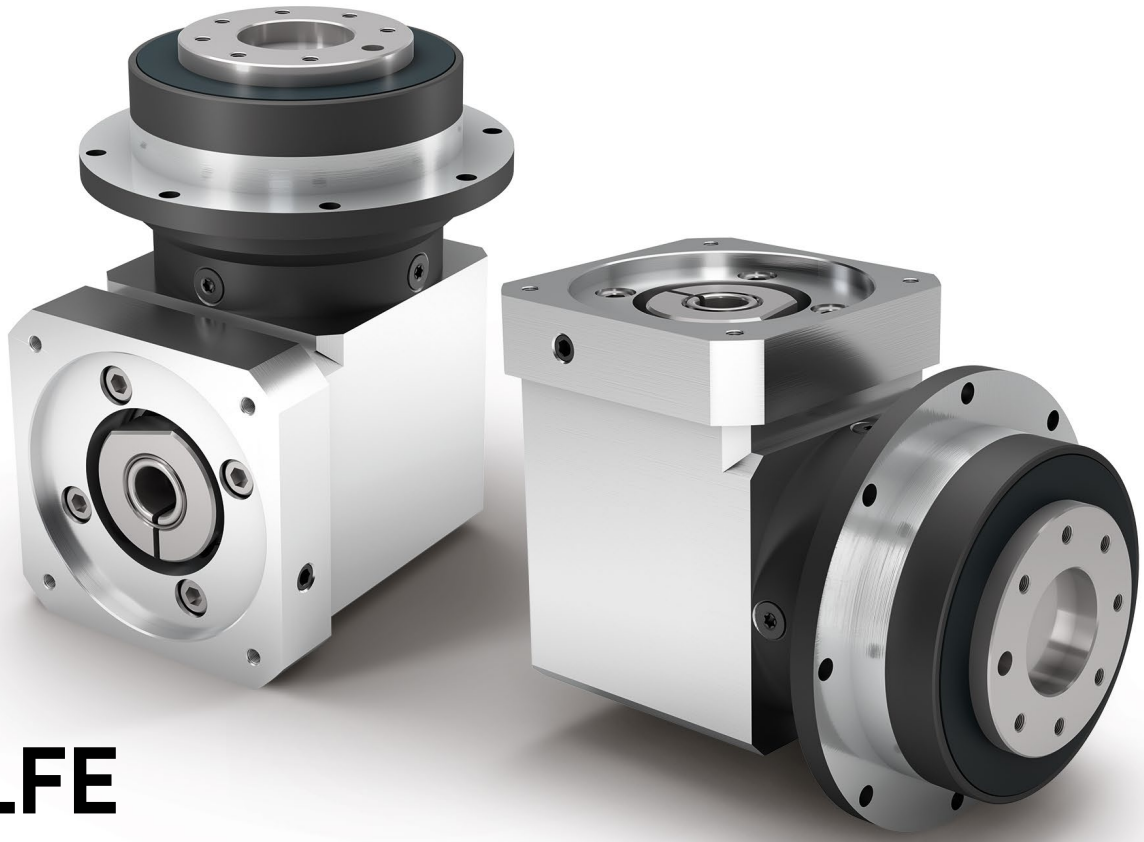

WPLFE

最短的直角行星减速机 配有法兰输出轴 扭转刚度极高

即使面临困境，也要冲破局限，发挥创新思维。**WPLFE** 是一款配有紧凑型法兰输出轴的直角行星减速机。它可以节省超过三分之一的空间而且扭转刚度显著提高。凭借其标准化的法兰接口，该行星减速机的安装极其简便。内置的定位销孔还为固定时的安全性提供了额外的保障。

The shortest right angle planetary gearbox with flange output shaft and maximum torsional stiffness

Thinking around corners even in tight spaces. The **WPLFE** is our right angle planetary gearbox with compact flange output shaft. You save more than a third of the space and gain a significantly higher torsional stiffness. Thanks to its standardized flange interface, it is especially easy to install. The integrated dowel hole provides additional secureness during fitting.

额定扭矩 Nominal output torque	**14 - 260 Nm**
径向力 Radial force	**550 - 2400 N**
轴向力 Axial force	**1200 - 3300 N**
回程间隙 Torsional backlash	**11 - 18 arcmin**
防护等级 Protection class	**IP54**

结构尺寸
Frame sizes

64 **90** **110**

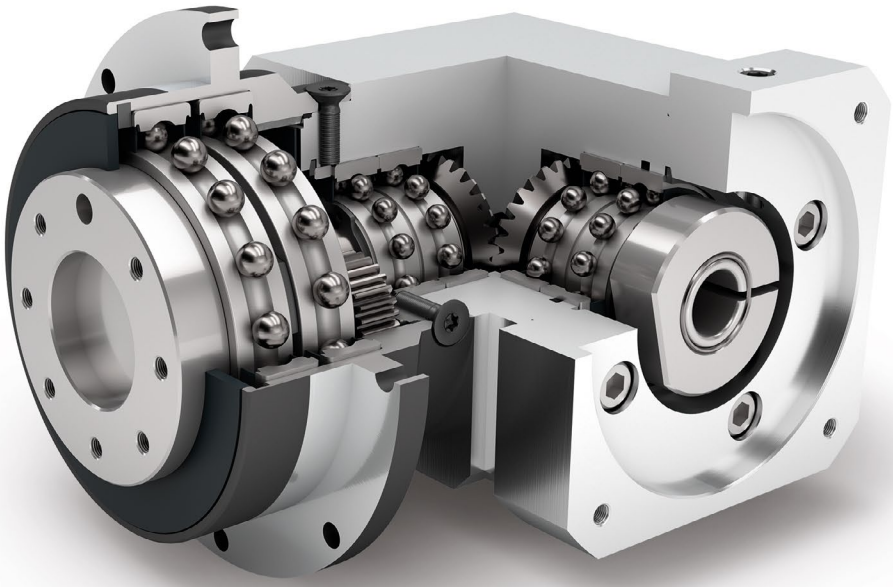

经济型
Economy Line

直角型减速机
Right angle gearbox

旋转方向 同方向
Equidirectional rotation

直齿
Spur gear

锥齿轮 直角箱
Bevel gear right angle stage

圆形特大号输出法兰
Extra large round type output flange

低摩擦深沟球轴承
Low-friction deep groove ball bearings

法兰输出轴（按 ISO 9409 标准）
Flange output shaft (ISO 9409)

行星齿轮架
Planet carrier in disc design

技术特点的详细解释，请从第169页读起。
Detailed explanations of the technical features starting on page 169.

Code	减速机参数	Gearbox characteristics			WPLFE064	WPLFE090	WPLFE110	p[1]
	使用寿命（L_{10h}）	Service life (L_{10h})	t_L	h	20.000			
	T_{2N} x 0,88 时的使用寿命	Service life at T_{2N} x 0,88			30.000			
	满载时效率[2]	Efficiency at full load[2]	η	%	94			1
					93			2
	最低工作温度	Min. operating temperature	T_{min}	°C	-25			
	最高工作温度	Max. operating temperature	T_{max}		90			
	防护等级	Protection class			IP54			
S	标准润滑	Standard lubrication			润滑脂（终生润滑）/ Grease (lifetime lubrication)			
F	食品级润滑	Food grade lubrication			润滑脂（终生润滑）/ Grease (lifetime lubrication)			
L	低温润滑[3]	Low temperature lubrication[3]			润滑脂（终生润滑）/ Grease (lifetime lubrication)			
	安装位置	Installation position			任意 / Any			
S	标准回程间隙	Standard backlash	j_t	arcmin	< 16	< 13	< 11	1
					< 18	< 15	< 13	2
	抗扭刚度[2]	Torsional stiffness[2]	c_g	Nm / arcmin	2,9 - 6,2	5,8 - 17,5	15,9 - 40,5	1
					4,9 - 9,9	14,3 - 29,5	26,0 - 69,0	2
	减速机重量[2]	Gearbox weight[2]	m_G	kg	1,8	4,5 - 4,6	10,5 - 10,6	1
					2,0 - 2,1	5,0 - 5,3	12,2 - 12,5	2
S	标准的箱体表面	Standard surface			箱体:钢 – 热处理后氧化（黑色） Housing: Steel – heat-treated and post-oxidized (black)			
	运行噪音[4]	Running noise[4]	Q_g	dB(A)	70	73	75	
	基于减速机输入法兰的最大弯矩[5]	Max. bending moment based on the gearbox input flange[5]	M_b	Nm	5	10,5	26	

输出轴载荷	Output shaft loads			WPLFE064	WPLFE090	WPLFE110	p[1]
20,000 h 的径向力[6][7]	Radial force for 20,000 h[6][7]	$F_{r\,20.000\,h}$	N	550	1400	2400	
20,000 h 的轴向力[6][7]	Axial force for 20,000 h[6][7]	$F_{a\,20.000\,h}$		1200	3000	3300	
30,000 h 的径向力[6][7]	Radial force for 30,000 h[6][7]	$F_{r\,30.000\,h}$		500	1200	2100	
30,000 h 的轴向力[6][7]	Axial force for 30,000 h[6][7]	$F_{a\,30.000\,h}$		1200	3000	3300	
最大径向力[7][8]	Maximum radial force[7][8]	$F_{r\,Stat}$		900	2200	3800	
最大轴向力[7][8]	Maximum axial force[7][8]	$F_{a\,Stat}$		1200	3300	5200	
20,000 h 倾斜力矩[6][8]	Tilting moment for 20,000 h[6][8]	$M_{K\,20.000\,h}$	Nm	12	46	109	
30,000 h 倾斜力矩[6][8]	Tilting moment for 30,000 h[6][8]	$M_{K\,30.000\,h}$		11	40	96	

转动惯量	Moment of inertia			WPLFE064	WPLFE090	WPLFE110	p[1]
转动惯量[2]	Mass moment of inertia[2]	J	kgcm²	0,228 - 0,439	0,957 - 1,783	1,926 - 3,914	1
				0,220 - 0,359	0,909 - 1,286	1,819 - 2,892	2

(1) 减速机级数
(2) 传动比相关的数值可在 Tec Data Finder 中检索 – www.neugart.com
(3) T_{min} = -40°C. 理想运行温度最高为 50°C
(4) 距离减速机1 m 时; 在输入转速为 n_1=3000 min^{-1} 且无负荷时测得; i=5
(5) 最大电机重量* (单位 : kg) = 0.2 x M_b / 电机长度 (单位: m)
* 电机重量对称分布
* 水平和固定的安装位置
(6) 数据以 n_2=100 min^{-1} 的输出轴转速为准。
(7) 以输出轴中心为准
(8) 更改 T_{2N}, F_r, F_a 以及周期和轴承使用寿命时, 数值存在偏差（部分较高）。利用 NCP 针对应用进行专门设计 – www.neugart.com

(1) Number of stages
(2) The ratio-dependent values can be retrieved in Tec Data Finder – www.neugart.com
(3) T_{min} = -40°C. Optimal operating temperature max. 50°C
(4) Sound pressure level from 1 m, measured on input running at n_1=3000 rpm no load; i=5
(5) Max. motor weight* in kg = 0.2 x M_b / motor length in m
* with symmetrically distributed motor weight
* with horizontal and stationary mounting
(6) These values are based on an output shaft speed of n_2=100 rpm
(7) Based on the end of the output shaft
(8) Other (sometimes higher) values following changes to T_{2N}, F_r, F_a, cycle, and service life of bearing. Application specific configuration with NCP – www.neugart.com

输出扭矩	**Output torques**			**WPLFE064**	**WPLFE090**	**WPLFE110**	**i**[1]	**p**[2]
额定输出扭矩[3]	Nominal output torque[3]	T_{2N}	Nm	14	40[4]	80[4]	3	1
				19	53[4]	105[4]	4	
				24	67[4]	130[4]	5	
				25	65	135	7	
				18	50	120	8	
				15	38	95	10	
				44[4]	130[4]	210[4]	9	2
				44	120[4]	260[4]	12	
				44	110	230	15	
				44	120	260	16	
				44	120	260	20	
				40	110	230	25	
				44	120	260	32	
				40	110	230	40	
				18	50	120	64	
				15	38	95	100	
最大输出扭矩[5]	Max. output torque[5]	T_{2max}	Nm	22	64	128	3	1
				30	85	168	4	
				38	107	208	5	
				40	104	216	7	
				29	80	192	8	
				24	61	152	10	
				70	208	336	9	2
				70	192	416	12	
				70	176	368	15	
				70	192	416	16	
				70	192	416	20	
				64	176	368	25	
				70	192	416	32	
				64	176	368	40	
				29	80	192	64	
				24	61	152	100	

(1) 传动比 ($i=n_1/n_2$)
(2) 减速机级数
(3) 利用 NCP 针对应用进行专门设计 – www.neugart.com
(4) T_{2N} 作用时 寿命不是10.000 h
(5) 允许输出轴转动30.000转; 参见第 158 页

(1) Ratios ($i=n_1/n_2$)
(2) Number of stages
(3) Application specific configuration with NCP – www.neugart.com
(4) Different service life: 10,000 h at T_{2N}
(5) 30,000 rotations of the output shaft permitted; see page 159

输出扭矩	Output torques			WPLFE064	WPLFE090	WPLFE110	i[1]	p[2]
急停扭矩[3]	Emergency stop torque[3]	T_{2Stop}	Nm	66	180	360	3	1
				86	240	474	4	
				80	220	500	5	
				80	178	340	7	
				80	190	380	8	
				70	170	430	10	
				88	260	500	9	2
				88	240	520	12	
				88	220	500	15	
				88	240	520	16	
				88	240	520	20	
				80	220	500	25	
				88	240	520	32	
				80	220	500	40	
				80	190	380	64	
				80	200	430	100	

输入转速	Input speeds			WPLFE064	WPLFE090	WPLFE110	i[1]	p[2]
T_{2N} 和 S1 时的平均热输入转速[4][5]	Average thermal input speed at T_{2N} and S1[4][5]	n_{1N}	min^{-1}	4000[6]	2800[6]	2200[6]	3	1
				4400[6]	3000[6]	2400[6]	4	
				4500[6]	3200[6]	2600[6]	5	
				4500[6]	4000[6]	3000[6]	7	
				4500	4000[6]	3300[6]	8	
				4500	4000	3500[6]	10	
				4300[6]	2900[6]	2400[6]	9	2
				4500[6]	3400[6]	2600[6]	12	
				4500[6]	3800[6]	3100[6]	15	
				4500[6]	3800[6]	3000[6]	16	
				4500	4000[6]	3400[6]	20	
				4500	4000[6]	3500[6]	25	
				4500	4000	3500[6]	32	
				4500	4000	3500	40	
				4500	4000	3500	64	
				4500	4000	3500	100	
最高机械输入转速[4]	Max. mechanical input speed[4]	n_{1Limit}	min^{-1}	13000	7000	6500		1
				13000	7000	6500		2

(1) 传动比 ($i=n_1/n_2$)
(2) 减速机级数
(3) 允许 1000 次
(4) 利用 NCP 针对应用设计转速 – www.neugart.com
(5) 定义请参见第 158 页
(6) 在 50% T_{2N} 输出和 S1 模式下 的平均热传动转速

(1) Ratios ($i=n_1/n_2$)
(2) Number of stages
(3) Permitted 1000 times
(4) Application-specific speed configurations with NCP – www.neugart.com
(5) See page 159 for the definition
(6) Average thermal input speed at 50% T_{2N} and S1

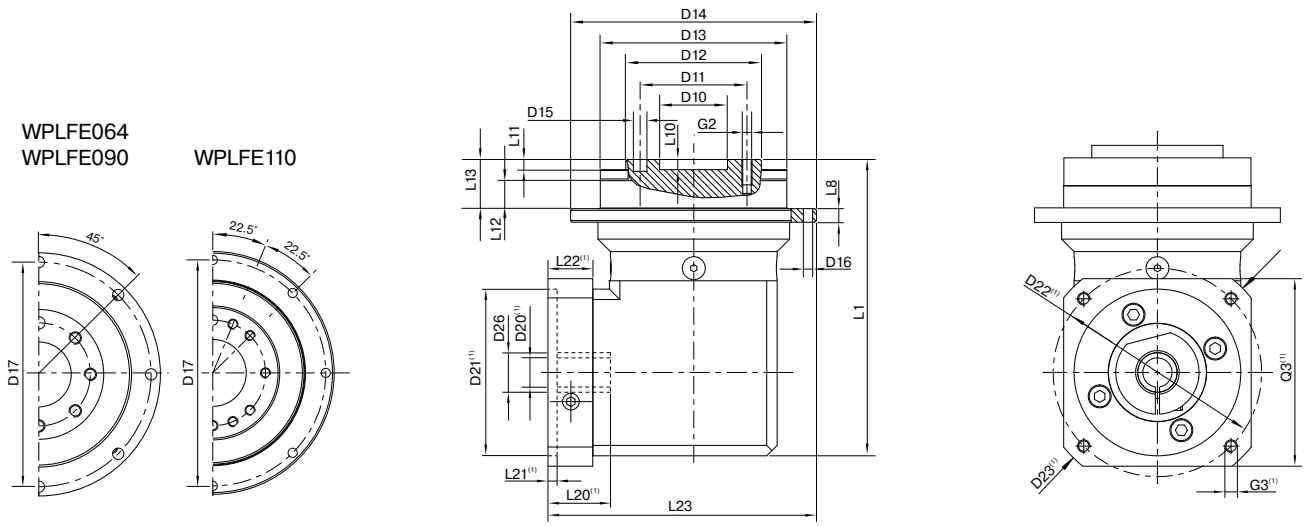

图示为带平键的 WPLFE090 / 1 级 / 带有配合销孔的法兰输出轴 / 19 mm 锁紧系统 / 适配电机法兰– 2 件式 – 正方形通用法兰 / B5 电机法兰类型
Drawing corresponds to a WPLFE090 / 1-stage / flange output shaft with dowel hole / 19 mm clamping system / motor adaptation – 2-part – square universal flange / B5 flange type motor

(1) 具体尺寸视电机/减速机法兰而定。可以在 www.neugart.com 下 Tec Data Finder。中针对每个电机适配电机特有的输入法兰几何尺寸。
(1) The dimensions vary with the motor/gearbox flange. The input flange dimensions can be retrieved for each specific motor in Tec Data Finder at www.neugart.com

几何尺寸(2)	Geometry(2)			WPLFE064	WPLFE090	WPLFE110	p(3)	Code
输出端定位凹槽直径	Centering diameter output shaft	D10	H7	20	31,5	40		
输出端安装孔节圆直径	Pitch circle diameter output shaft	D11		31,5	50	63		
法兰输出轴的直径	Flange output shaft diameter	D12	h7	40	63	80		
输出法兰定位凸台直径	Centering diameter output flange	D13		64	90	110		
输出法兰直径	Flange diameter output	D14		86	118	145		
输出端安装孔直径	Mounting bore output	D16		4,5 8x45°	5,5 8x45°	5,5 8x45°		
输出法兰安装孔节圆直径	Pitch circle diameter output flange	D17		79	109	135		
总长	Total length	L1		110	149	198,5	1	
				122,5	165,5	225,5	2	
输出端法兰厚度	Flange thickness output	L8		4	7	8		
输出轴定位凸台深度	Centering depth output shaft	L10		4	6	6		
		L11		3	6	6		
输出法兰定位凸台深度	Centering depth output flange	L12		7,5	10,5	10,5		
输出法兰长度	Output flange length	L13		19,5	30,0	29,0		
最小总高度	Min. overall height	L23		98,5	129	160,5		
电机轴直径 j6/k6	Motor shaft diameter j6/k6	D20		更多信息见第 155/156 页 More information on page 155/156				
输入端锁紧系统直径	Clamping system diameter input	D26						
带有配合销孔的法兰输出轴 (EN ISO 9409-1)	Flange output shaft with dowel hole (EN ISO 9409-1)							E
配合销孔 x 深度	Dowel hole x depth	D15	H7	5x6	6x7	6x7		
数量 x 螺纹 x 深度	Number x thread x depth	G2		7 x M5x7	7 x M6x10	11 x M6x12		

(2) 所有的尺寸单位为mm
(3) 减速机级数

(2) Dimensions in mm
(3) Number of stages

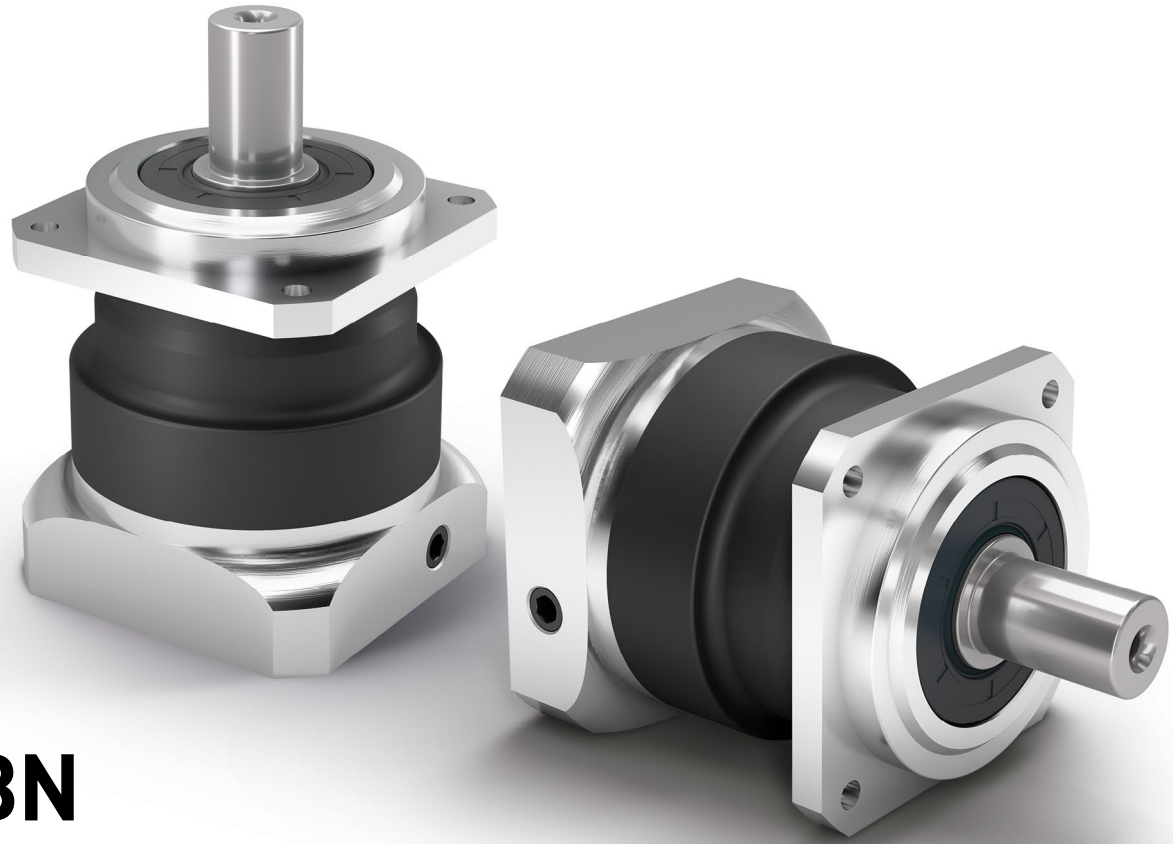

PSBN

高性能精密减速机
配有高精度斜齿
驱动运行时安静无噪音

PSBN 是高精度行星减速机和高效轴承科技的完美结合。专为需要在保证高转速的同时达到最优性能的应用情况而设计。借助高精度的斜齿，其运行十分稳定，且比一般的减速机都要安静。

The high-performance precision planetary gearbox with helical gearing for a particularly quiet drive

Our **PSBN** is the ideal combination of precision planetary gearbox and efficient bearing technology. It has been developed specifically for delivering the maximum performance at high speeds. Its helical teeth provide homogeneous synchronism and quiet running noise.

额定扭矩 Nominal output torque	**28 - 470 Nm**
径向力 Radial force	**1000 - 5800 N**
轴向力 Axial force	**1500 - 9400 N**
回程间隙 Torsional backlash	**1 - 5 arcmin**
防护等级 Protection class	**IP65**

结构尺寸
Frame sizes

70 **90** **115** **142**

常州库克传动科技有限公司
技术服务专线：189-1589-6797
Technical Service Line www.czkuke.com

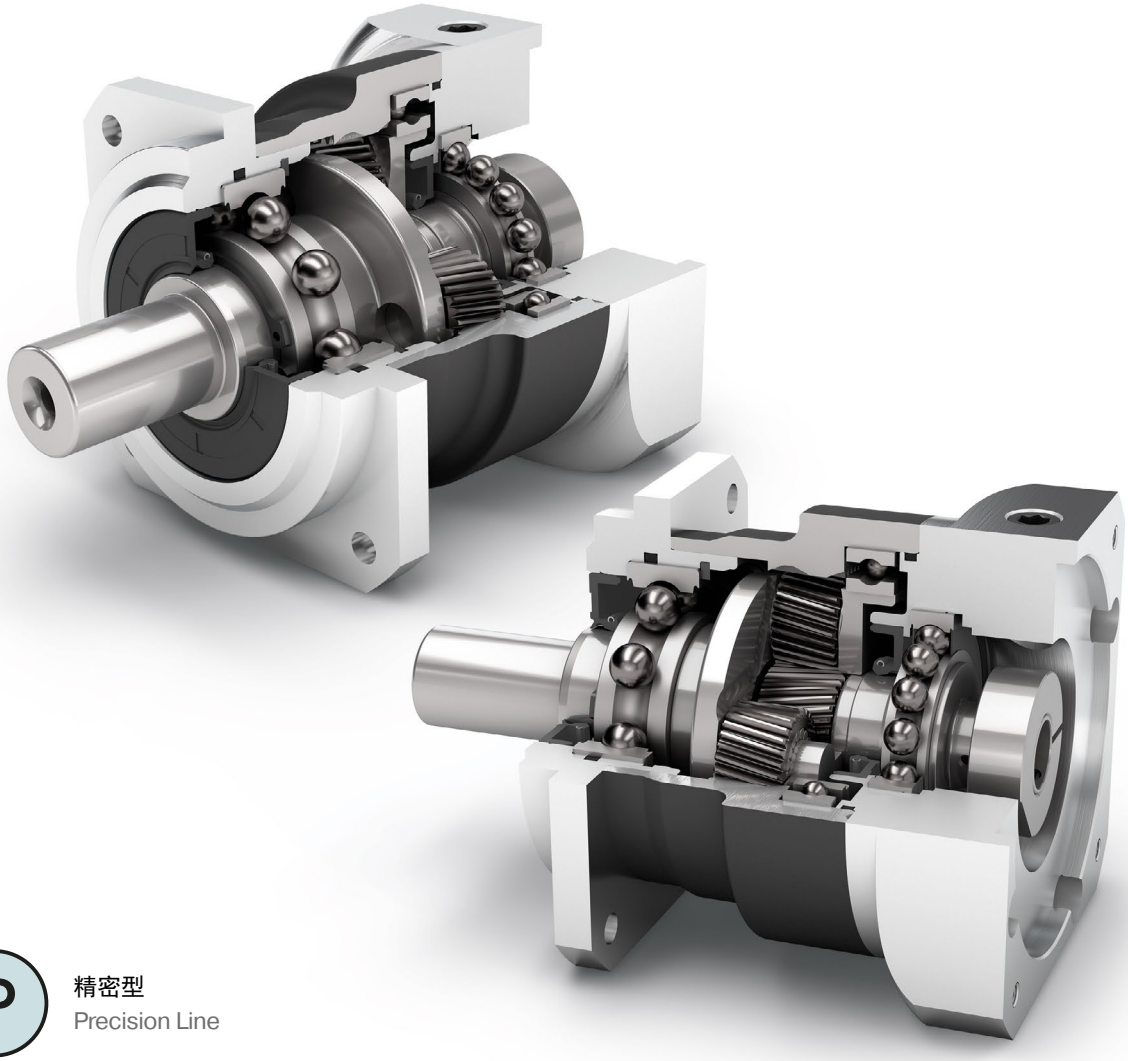

精密型
Precision Line

同轴减速机
Coaxial gearbox

旋转方向 同方向
Equidirectional rotation

斜齿
Helical gear

正方形输出法兰
Square type output flange

低摩擦深沟球轴承
Low-friction deep groove ball bearings

径向轴密封
Rotary shaft seal

行星齿轮架（笼状结构）
Planet carrier in cage design

可选：降低回程间隙
Option: Reduced backlash

技术特点的详细解释，请从第169页读起。
Detailed explanations of the technical features starting on page 169.

Code	减速机参数	Gearbox characteristics			PSBN070	PSBN090	PSBN115	PSBN142	p[1]
	使用寿命 (L_{10h})	Service life (L_{10h})	t_L	h	20.000				
	T_{2N} x 0,88 时的使用寿命	Service life at T_{2N} x 0,88			30.000				
	满载时效率[2]	Efficiency at full load[2]	η	%	98				1
					96				2
	最低工作温度	Min. operating temperature	T_{min}	°C	-25				
	最高工作温度	Max. operating temperature	T_{max}		90				
	防护等级	Protection class			IP65				
S	标准润滑	Standard lubrication			润滑油(终生润滑) / Oil (lifetime lubrication)				
F	食品级润滑	Food grade lubrication			润滑油(终生润滑) / Oil (lifetime lubrication)				
L	低温润滑[3]	Low temperature lubrication[3]			润滑油(终生润滑) / Oil (lifetime lubrication)				
	安装位置	Installation position			任意 / Any				
S	标准回程间隙	Standard backlash	j_t	arcmin	< 3				1
					< 5				2
R	降低回程间隙	Reduced backlash			< 2	< 1	< 1	< 1	
	抗扭刚度[2]	Torsional stiffness[2]	c_g	Nm / arcmin	4,1 - 5,4	9,3 - 12,8	22,5 - 32,5	59,5 - 76,0	1
					4,1 - 5,7	10,2 - 13,4	25,5 - 35,0	57,5 - 71,0	2
	减速机重量[2]	Gearbox weight[2]	m_G	kg	1,4 - 1,5	2,8 - 2,9	5,4 - 5,8	13,4 - 13,7	1
					2,1	3,4 - 3,5	6,7 - 6,9	15,4 - 15,8	2
S	标准的箱体表面	Standard surface			箱体:钢 – 热处理后氧化(黑色) Housing: Steel – heat-treated and post-oxidized (black)				
	运行噪音[4]	Running noise[4]	Q_g	dB(A)	57	58	63	66	
	基于减速机输入法兰的最大弯矩[5]	Max. bending moment based on the gearbox input flange[5]	M_b	Nm	18	38	80	180	1
					18	18	38	80	2

输出轴载荷	Output shaft loads			PSBN070	PSBN090	PSBN115	PSBN142	p[1]
20,000 h 的径向力[6][7]	Radial force for 20,000 h[6][7]	$F_{r\,20.000\,h}$	N	1000	1900	2300	4200 - 5800	
20,000 h 的轴向力[6][7]	Axial force for 20,000 h[6][7]	$F_{a\,20.000\,h}$		1500	3000	4400	9400	
30,000 h 的径向力[6][7]	Radial force for 30,000 h[6][7]	$F_{r\,30.000\,h}$		850	1700	2000	3700 - 5100	
30,000 h 的轴向力[6][7]	Axial force for 30,000 h[6][7]	$F_{a\,30.000\,h}$		1300	2500	3700	7700	
最大径向力[7][8]	Maximum radial force[7][8]	$F_{r\,Stat}$		1600	3100	4500	9500	
最大轴向力[7][8]	Maximum axial force[7][8]	$F_{a\,Stat}$		1500	2800	4500	9600	
20,000 h 倾斜力矩[6][8]	Tilting moment for 20,000 h[6][8]	$M_{K\,20.000\,h}$	Nm	68	154	226	565 - 794	
30,000 h 倾斜力矩[6][8]	Tilting moment for 30,000 h[6][8]	$M_{K\,30.000\,h}$		58	138	197	495 - 697	

转动惯量	Moment of inertia			PSBN070	PSBN090	PSBN115	PSBN142	p[1]
转动惯量[2]	Mass moment of inertia[2]	J	$kgcm^2$	0,127 - 0,260	0,327 - 0,785	0,874 - 2,650	6,539 - 14,440	1
				0,123 - 0,175	0,124 - 0,200	0,321 - 0,600	0,841 - 2,003	2

(1) 减速机级数
(2) 传动比相关的数值可在 Tec Data Finder 中检索 – www.neugart.com
(3) T_{min} = -40°C. 理想运行温度最高为 50°C
(4) 距离减速机1 m 时; 在输入转速为 n_1=3000 min^{-1} 且无负荷时测得; i=5
(5) 最大电机重量* (单位 : kg) = 0.2 x M_b / 电机长度 (单位: m)
* 电机重量对称分布
* 水平和固定的安装位置
(6) 数据以 n_2=100 min^{-1} 的输出轴转速为准。
(7) 以输出轴中心为准
(8) 更改 T_{2N}, F_r, F_a 以及周期和轴承使用寿命时; 数值存在偏差(部分较高)。
利用 NCP 针对应用进行专门设计 – www.neugart.com

(1) Number of stages
(2) The ratio-dependent values can be retrieved in Tec Data Finder – www.neugart.com
(3) T_{min} = -40°C. Optimal operating temperature max. 50°C
(4) Sound pressure level from 1 m, measured on input running at n_1=3000 rpm no load; i=5
(5) Max. motor weight* in kg = 0.2 x M_b / motor length in m
* with symmetrically distributed motor weight
* with horizontal and stationary mounting
(6) These values are based on an output shaft speed of n_2=100 rpm
(7) Based on center of output shaft
(8) Other (sometimes higher) values following changes to T_{2N}, F_r, F_a, cycle, and service life of bearing. Application specific configuration with NCP – www.neugart.com

输出扭矩	Output torques			PSBN070	PSBN090	PSBN115	PSBN142	i(1)	p(2)
额定输出扭矩(3)(4)	Nominal output torque(3)(4)	T_{2N}	Nm	29	54	135	380	3	1
				39	80	180	470	4	
				40	80	175	405	5	
				37	78	175	355	7	
				39	75	155	350	8	
				28	59	140	305	10	
				29	54	135	380	12	2
				29	54	135	380	15	
				39	80	180	450	16	
				39	80	180	450	20	
				40	80	175	405	25	
				40	80	175	405	35	
				39	80	180	470	40	
				40	80	175	405	50	
				37	78	175	355	70	
				28	59	140	305	100	
最大输出扭矩(4)(5)	Max. output torque(4)(5)	T_{2max}	Nm	46	86	216	608	3	1
				62	128	288	752	4	
				64	128	280	648	5	
				59	125	280	568	7	
				62	120	248	560	8	
				45	94	224	488	10	
				46	86	216	608	12	2
				46	86	216	608	15	
				62	128	288	720	16	
				62	128	288	720	20	
				64	128	280	648	25	
				64	128	280	648	35	
				62	128	288	752	40	
				64	128	280	648	50	
				59	125	280	568	70	
				45	94	224	488	100	

(1) 传动比 ($i=n_1/n_2$)
(2) 减速机级数
(3) 利用 NCP 针对应用进行专门设计 – www.neugart.com
(4) 平键 (代码 “A”)时的数值: 针对交变载荷
(5) 允许输出轴转动30.000转: 参见第 158 页

(1) Ratios ($i=n_1/n_2$)
(2) Number of stages
(3) Application specific configuration with NCP – www.neugart.com
(4) Values for feather key (code “A”): for repeated load
(5) 30,000 rotations of the output shaft permitted; see page 159

输出扭矩	Output torques			PSBN070	PSBN090	PSBN115	PSBN142	i[1]	p[2]
急停扭矩[3]	Emergency stop torque[3]	T_{2Stop}	Nm	90	210	490	1250	3	1
				120	280	650	1650	4	
				130	280	650	1650	5	
				80	175	340	1300	7	
				90	200	380	1100	8	
				90	200	480	600	10	
				135	220	500	1250	12	2
				135	220	500	1250	15	
				150	300	650	1650	16	
				150	300	650	1650	20	
				150	300	650	1650	25	
				150	300	650	1650	35	
				150	300	650	1650	40	
				150	300	650	1650	50	
				80	175	340	1300	70	
				80	200	480	600	100	

输入转速	Input speeds			PSBN070	PSBN090	PSBN115	PSBN142	i[1]	p[2]
T_{2N} 和 S1 时的平均热输入转速[4][5]	Average thermal input speed at T_{2N} and S1[4][5]	n_{1N}	min^{-1}	3800[6]	3400[6]	2900[6]	1600[6]	3	1
				4400[6]	3700[6]	3000[6]	1950[6]	4	
				4600[6]	3900[6]	3500[6]	2350[6]	5	
				5000	4500	4000[6]	3150[6]	7	
				5000	4500	4000	3450[6]	8	
				5000	4500	4000	3500	10	
				5000	5000	4500	3150[6]	12	2
				5000	5000	4500	3950[6]	15	
				5000	5000	4500	3400[6]	16	
				5000	5000	4500	4000[6]	20	
				5000	5000	4500	4000	25	
				5000	5000	4500	4000	35	
				5000	5000	4500	4000	40	
				5000	5000	4500	4000	50	
				5000	5000	4500	4000	70	
				5000	5000	4500	4000	100	
最高机械输入转速[4]	Max. mechanical input speed[4]	n_{1Limit}	min^{-1}	14000	10000	8500	6500		1
				14000	14000	10000	8500		2

(1) 传动比 ($i=n_1/n_2$)
(2) 减速机级数
(3) 允许 1000 次
(4) 利用 NCP 针对应用设计转速 – www.neugart.com
(5) 定义请参见第 158 页
(6) 在 50% T_{2N} 输出和 S1 模式下 的平均热传动转速

(1) Ratios ($i=n_1/n_2$)
(2) Number of stages
(3) Permitted 1000 times
(4) Application-specific speed configurations with NCP – www.neugart.com
(5) See page 159 for the definition
(6) Average thermal input speed at 50% T_{2N} and S1

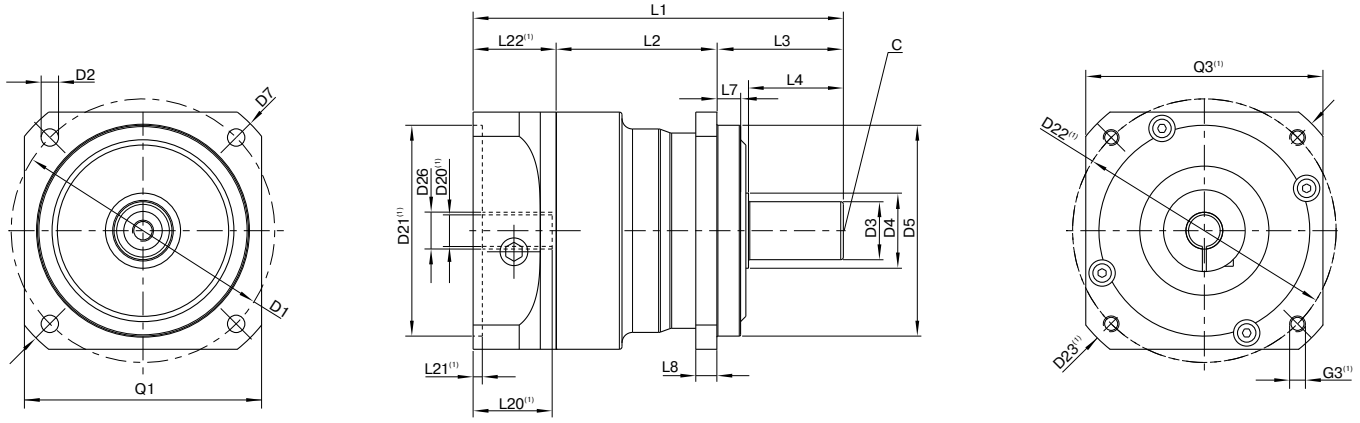

图示为带平键的 PSBN090 / 1 级 / 光滑输出轴 / 14 mm 锁紧系统 / 适配电机法兰 – 2 件式 – 圆形通用法兰 / B5 电机法兰类型
Drawing corresponds to a PSBN090 / 1-stage / smooth output shaft / 14 mm clamping system / motor adaptation – 2-part – round universal flange / B5 flange type motor

(1) 具体尺寸视电机/减速机法兰而定。可以在 www.neugart.com 下 Tec Data Finder。中针对每个电机适配电机特有的输入法兰几何尺寸。
(1) The dimensions vary with the motor/gearbox flange. The input flange dimensions can be retrieved for each specific motor in Tec Data Finder at www.neugart.com

几何尺寸(2)	Geometry(2)			PSBN070	PSBN090	PSBN115	PSBN142	p(2)	Code
输出端安装孔节圆直径	Pitch circle diameter output	D1		70	100	130	165		
输出端安装孔直径	Mounting bore output	D2	4x	5,5	6,6	9,0	11,0		
输出轴直径	Shaft diameter output	D3	j6	16	22	32	40		
输出轴轴肩直径	Shaft collar output	D4		23,5	28,5	38,5	48,5		
输出端定位凸台直径	Centering diameter output	D5	g6	50	80	110	130		
输出法兰对角线尺寸	Diagonal dimension output	D7		80	115	148	185		
输出端法兰外方	Flange cross section output	Q1	■	60	90	115	140		
最小总长	Min. total length	L1		116,5	140,5	182,5	247,5	1	
				145	162,5	204,5	278,5	2	
箱体长度	Housing length	L2		54	61	74	100,5	1	
				82,5	89	107,5	138,5	2	
输出轴轴长	Shaft length output	L3		37	48	65	97		
输出端定位凸台深度	Centering depth output	L7		6	9	4	12		
输出端法兰厚度	Flange thickness output	L8		6	8	10	12		
中心孔 (DIN 332, DR 形)	Center hole (DIN 332, type DR)	C		M5x12,5	M8x19	M12x28	M16x36		
电机轴直径j6/k6	Motor shaft diameter j6/k6	D20		更多信息见第 155/156 页 More information on page 155/156					
输入端锁紧系统直径	Clamping system diameter input	D26							
带平键的输出轴 (DIN 6885-1)	Output shaft with feather key (DIN 6885-1)			A 5x5x25	A 6x6x28	A 10x8x50	A 12x8x65		A
平键宽度 (DIN 6885-1)	Feather key width (DIN 6885-1)	B1		5	6	10	12		
含平键在内的轴高 (DIN 6885-1)	Shaft height including feather key (DIN 6885-1)	H1		18	24,5	35	43		
到轴肩的距离	Shaft length from shoulder	L4		28	36	58	82		
平键长度	Feather key length	L5		25	28	50	65		
到轴端的距离	Distance from shaft end	L6		2	4	4	8		
光滑输出轴	Smooth output shaft								B
到轴肩的距离	Shaft length from shoulder	L4		28	36	58	82		

(2) 所有的尺寸单位为mm
(3) 减速机级数

(2) Dimensions in mm
(3) Number of stages

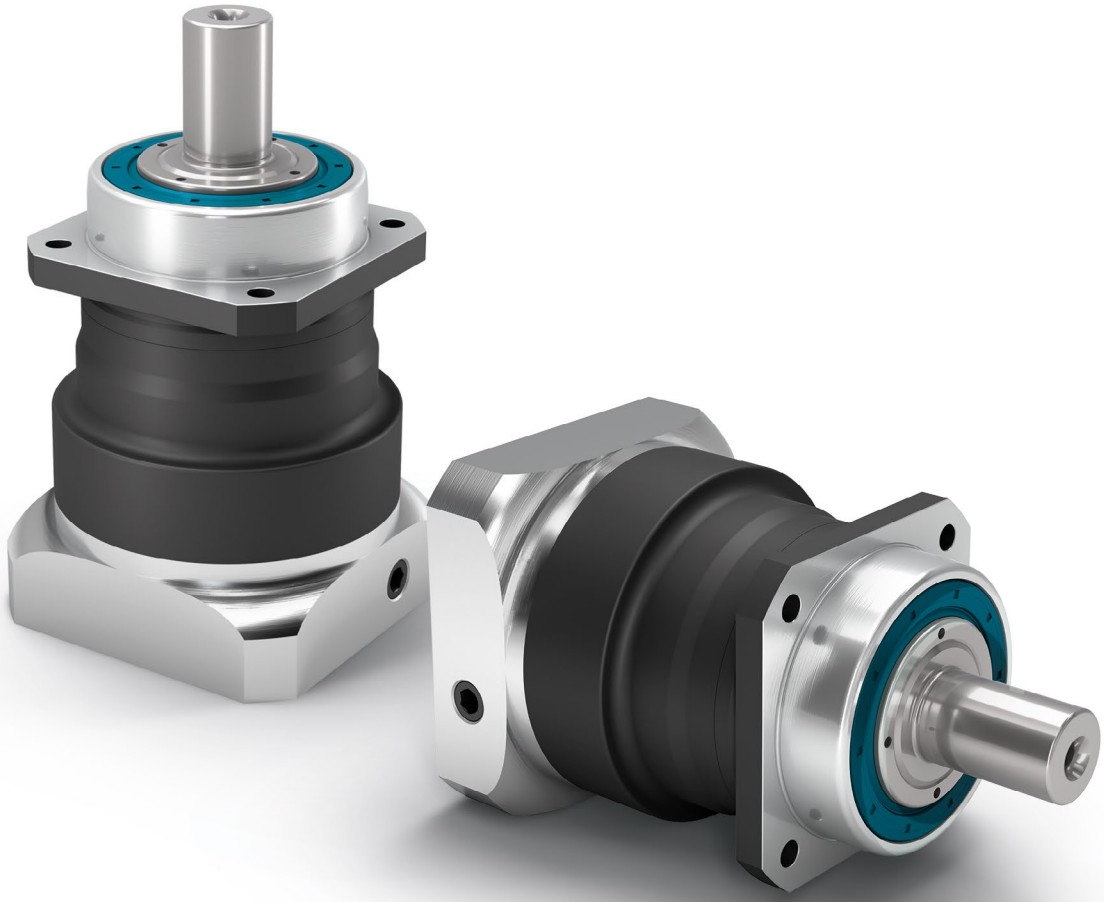

PSN

斜齿高精度减速机能够实现噪音极低的同步运行，轴承负载能力强

PSN的进步之处在于：其新型斜齿轮能够实现噪音极低的同步运行。使用这款高精度行星减速机时，振动将降至最低——可以在轴承负载极高时提高工件表面的质量。

The helical precision planetary gearbox for low-noise operation and high bearing loads

Our **PSN** embodies pure progress: Its innovative helical teeth safeguard low-noise operations. This precision planetary gearbox minimizes vibrations, and therefore increases the quality of your workpiece surfaces even under the highest bearing loads.

额定扭矩 Nominal output torque	**28 - 950 Nm**
径向力 Radial force	**3200 - 20000 N**
轴向力 Axial force	**4400 - 19000 N**
回程间隙 Torsional backlash	**1 - 5 arcmin**
防护等级 Protection class	**IP65**

结构尺寸
Frame sizes

70	**90**	**115**	**142**	**190**

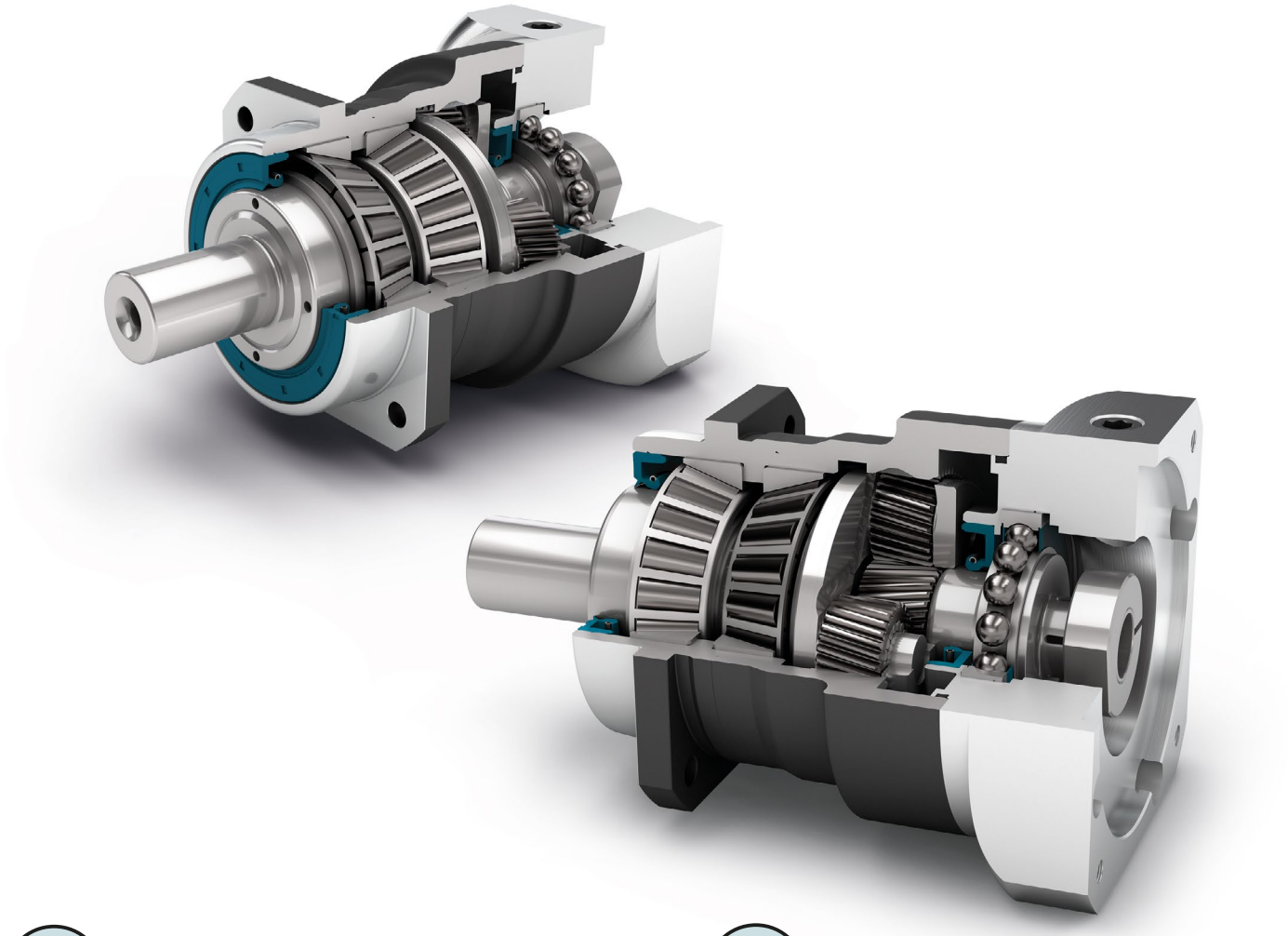

精密型
Precision Line

旋转方向 同方向
Equidirectional rotation

正方形输出法兰
Square type output flange

径向轴密封
Rotary shaft seal

行星齿轮架（笼状结构）
Planet carrier in cage design

可选：花键输出轴（DIN 5480）
Option: Splined output shaft (DIN 5480)

同轴减速机
Coaxial gearbox

斜齿
Helical gear

配有预紧的圆锥滚子轴承
Preloaded tapered roller bearings

输出端带有超长定心环
Extra long centering collar

可选：降低回程间隙
Option: Reduced backlash

可选：装有小齿轮的高精度减速机 140页
Option: Planetary gearbox with mounted pinion on page 140

技术特点的详细解释，请从第169页读起。
Detailed explanations of the technical features starting on page 169.

Code	减速机参数	Gearbox characteristics			PSN070	PSN090	PSN115	PSN142	PSN190	p[1]
	使用寿命 (L_{10h})	Service life (L_{10h})	t_L	h	20.000					
	T_{2N} x 0,88 时的使用寿命	Service life at T_{2N} x 0,88			30.000					
	满载时效率[2]	Efficiency at full load[2]	η	%	98					1
					97					2
	最低工作温度	Min. operating temperature	T_{min}	°C	-25					
	最高工作温度	Max. operating temperature	T_{max}		90					
	防护等级	Protection class			IP65					
S	标准润滑	Standard lubrication			润滑油(终生润滑) / Oil (lifetime lubrication)					
F	食品级润滑	Food grade lubrication			润滑油(终生润滑) / Oil (lifetime lubrication)					
L	低温润滑[3]	Low temperature lubrication[3]			润滑油(终生润滑) / Oil (lifetime lubrication)					
	安装位置	Installation position			任意 / Any					
S	标准回程间隙	Standard backlash	j_t	arcmin	< 3					1
					< 5					2
R	降低回程间隙	Reduced backlash			< 2	< 1	< 1	< 1	< 1	
	抗扭刚度[2]	Torsional stiffness[2]	c_g	Nm / arcmin	3,6 - 4,8	9,2 - 13,0	22,0 - 34,5	62,0 - 88,0	181,0 - 246,0	1
					3,6 - 5,0	10,2 - 13,8	28,0 - 39,5	61,0 - 85,0	179,0 - 255,0	2
	减速机重量[2]	Gearbox weight[2]	m_G	kg	1,9 - 2,0	3,4 - 3,5	6,8 - 7,1	15,3 - 15,8	34,9 - 36,7	1
					2,6 - 2,7	4,0 - 4,1	8,0 - 8,2	17,1 - 17,6	39,8 - 41,7	2
S	标准的箱体表面	Standard surface			箱体:钢 – 热处理后氧化(黑色) Housing: Steel – heat-treated and post-oxidized (black)					
	运行噪音[4]	Running noise[4]	Q_g	dB(A)	57	58	63	66	68	
	基于减速机输入法兰的最大弯矩[5]	Max. bending moment based on the gearbox input flange[5]	M_b	Nm	18	38	80	180	300	1
					18	18	38	80	180	2

输出轴载荷	Output shaft loads			PSN070	PSN090	PSN115	PSN142	PSN190	p[1]
20,000 h 的径向力[6][7]	Radial force for 20,000 h[6][7]	$F_{r\,20.000\,h}$	N	3200	5500	6000	13000	20000	
20,000 h 的轴向力[6][7]	Axial force for 20,000 h[6][7]	$F_{a\,20.000\,h}$		4400	6400	8000	15000	19000	
30,000 h 的径向力[6][7]	Radial force for 30,000 h[6][7]	$F_{r\,30.000\,h}$		3200	4800	5400	11500	17500	
30,000 h 的轴向力[6][7]	Axial force for 30,000 h[6][7]	$F_{a\,30.000\,h}$		3900	5700	7000	13500	18500	
最大径向力[7][8]	Maximum radial force[7][8]	$F_{r\,Stat}$		3200	5500	6000	13000	20000	
最大轴向力[7][8]	Maximum axial force[7][8]	$F_{a\,Stat}$		4400	6400	8000	15000	19000	
20,000 h 倾斜力矩[6][8]	Tilting moment for 20,000 h[6][8]	$M_{K\,20.000\,h}$	Nm	203	419	562	1566	2887	
30,000 h 倾斜力矩[6][8]	Tilting moment for 30,000 h[6][8]	$M_{K\,30.000\,h}$		203	366	506	1385	2526	

转动惯量	Moment of inertia			PSN070	PSN090	PSN115	PSN142	PSN190	p[1]
转动惯量[2]	Mass moment of inertia[2]	J	$kgcm^2$	0,128 - 0,272	0,330 - 0,811	0,857 - 2,484	6,475 - 13,112	21,695 - 53,182	1
				0,123 - 0,177	0,124 - 0,204	0,321 - 0,600	0,840 - 1,962	6,360 - 10,654	2

(1) 减速机级数
(2) 传动比相关的数值可在 Tec Data Finder 中检索 – www.neugart.com
(3) T_{min} = -40°C. 理想运行温度最高为 50°C
(4) 距离减速机1 m 时; 在输入转速为 n_1=3000 min^{-1} 且无负荷时测得; i=5
(5) 最大电机重量* (单位 : kg) = 0.2 x M_b / 电机长度 (单位: m)
* 电机重量对称分布
* 水平和固定的安装位置
(6) 数据以 n_2=100 min^{-1} 的输出轴转速为准。
(7) 以输出轴中心为准
(8) 更改 T_{2N}, F_r, F_a 以及周期和轴承使用寿命时, 数值存在偏差(部分较高)。利用 NCP 针对应用进行专门设计 – www.neugart.com

(1) Number of stages
(2) The ratio-dependent values can be retrieved in Tec Data Finder – www.neugart.com
(3) T_{min} = -40°C. Optimal operating temperature max. 50°C
(4) Sound pressure level from 1 m, measured on input running at n_1=3000 rpm no load; i=5
(5) Max. motor weight* in kg = 0.2 x M_b / motor length in m
* with symmetrically distributed motor weight
* with horizontal and stationary mounting
(6) These values are based on an output shaft speed of n_2=100 rpm
(7) Based on center of output shaft
(8) Other (sometimes higher) values following changes to T_{2N}, F_r, F_a, cycle, and service life of bearing. Application specific configuration with NCP – www.neugart.com

输出扭矩	Output torques			PSN070	PSN090	PSN115	PSN142	PSN190	i(1)	p(2)
额定输出扭矩(3)(4)	Nominal output torque(3)(4)	T_{2N}	Nm	29	54	135	380	845	3	1
				39	80	180	470	950	4	
				40	80	175	405	950	5	
				37	78	175	355	900	7	
				28	59	140	305	750	10	
				29	54	135	380	845	12	2
				29	54	135	380	845	15	
				39	80	180	450	950	16	
				39	80	180	450	950	20	
				40	80	175	405	950	25	
				40	80	175	405	950	35	
				39	80	180	470	950	40	
				40	80	175	405	950	50	
				37	78	175	355	900	70	
				28	59	140	305	750	100	
最大输出扭矩(4)(5)	Max. output torque(4)(5)	T_{2max}	Nm	46	86	216	608	1352	3	1
				62	128	288	752	1520	4	
				64	128	280	648	1520	5	
				59	125	280	568	1440	7	
				45	94	224	488	1200	10	
				46	86	216	608	1352	12	2
				46	86	216	608	1352	15	
				62	128	288	720	1520	16	
				62	128	288	720	1520	20	
				64	128	280	648	1520	25	
				64	128	280	648	1520	35	
				62	128	288	752	1520	40	
				64	128	280	648	1520	50	
				59	125	280	568	1440	70	
				45	94	224	488	1200	100	

PSN

(1) 传动比 ($i=n_1/n_2$)
(2) 减速机级数
(3) 利用 NCP 针对应用进行专门设计 – www.neugart.com
(4) 平键 (代码 "A") 时的数值: 针对交变载荷
(5) 允许输出轴转动30.000转; 参见第 158 页

(1) Ratios ($i=n_1/n_2$)
(2) Number of stages
(3) Application specific configuration with NCP – www.neugart.com
(4) Values for feather key (code "A"): for repeated load
(5) 30,000 rotations of the output shaft permitted; see page 159

输出扭矩	Output torques			PSN070	PSN090	PSN115	PSN142	PSN190	i[1]	p[2]
急停扭矩[3]	Emergency stop torque[3]	T_{2Stop}	Nm	90	210	490	1250	2400	3	1
				120	280	650	1650	3200	4	
				130	280	650	1650	3200	5	
				80	175	340	1300	3200	7	
				90	200	480	600	1700	10	
				135	220	500	1250	2400	12	2
				135	220	500	1250	2400	15	
				150	300	650	1650	3200	16	
				150	300	650	1650	3200	20	
				150	300	650	1650	3200	25	
				150	300	650	1650	3200	35	
				150	300	650	1650	3200	40	
				150	300	650	1650	3200	50	
				80	175	340	1300	3200	70	
				80	200	480	600	1700	100	

输入转速	Input speeds			PSN070	PSN090	PSN115	PSN142	PSN190	i[1]	p[2]
T_{2N} 和 S1时的平均热输入转速[4][5]	Average thermal input speed at T_{2N} and S1[4][5]	n_{1N}	min^{-1}	3000[6]	2700[6]	2000[6]	1000[6]	750[6]	3	1
				3700[6]	3050[6]	2250[6]	1250[6]	900[6]	4	
				4400[6]	3700[6]	2750[6]	1550[6]	1100[6]	5	
				4500	4000	3500[6]	2000[6]	1450[6]	7	
				4500	4000	3500	2500[6]	1900[6]	10	
				4500	4500	4000[6]	2400[6]	1550[6]	12	2
				4500	4500	4000	3000[6]	1900[6]	15	
				4500	4500	4000[6]	2600[6]	1650[6]	16	
				4500	4500	4000	3250[6]	2050[6]	20	
				4500	4500	4000	3500[6]	2200[6]	25	
				4500	4500	4000	3500	2800[6]	35	
				4500	4500	4000	3500	3000[6]	40	
				4500	4500	4000	3500	3000	50	
				4500	4500	4000	3500	3000	70	
				4500	4500	4000	3500	3000	100	
最高机械输入转速[4]	Max. mechanical input speed[4]	n_{1Limit}	min^{-1}	14000	10000	8500	6500	6000		1
				14000	14000	10000	8500	6500		2

(1) 传动比 ($i=n_1/n_2$)
(2) 减速机级数
(3) 允许 1000 次
(4) 利用 NCP 针对应用设计转速 – www.neugart.com
(5) 定义请参见第 158 页
(6) 在 50% T_{2N} 输出和 S1 模式下 的平均热传动转速

(1) Ratios ($i=n_1/n_2$)
(2) Number of stages
(3) Permitted 1000 times
(4) Application-specific speed configurations with NCP – www.neugart.com
(5) See page 159 for the definition
(6) Average thermal input speed at 50% T_{2N} and S1

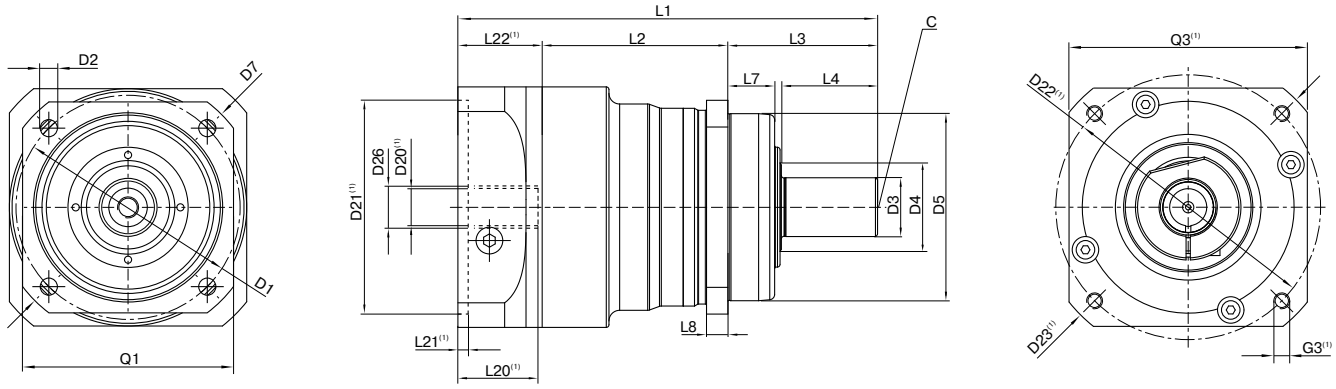

图示为带平键的 PSN090 / 1 级 / 光滑输出轴 / 14 mm 锁紧系统 / 适配电机法兰 – 2 件式 – 圆形通用法兰 / B5 电机法兰类型
Drawing corresponds to a PSN090 / 1-stage / smooth output shaft / 14 mm clamping system / motor adaptation – 2-part – round universal flange / B5 flange type motor

(1) 具体尺寸视电机/减速机法兰而定。可以在 www.neugart.com 下 Tec Data Finder。中针对每个电机适配电机特有的输入法兰几何尺寸。
(1) The dimensions vary with the motor/gearbox flange. The input flange dimensions can be retrieved for each specific motor in Tec Data Finder at www.neugart.com

几何尺寸(2)	Geometry(2)			PSN070	PSN090	PSN115	PSN142	PSN190	p(3)	Code
输出端安装孔节圆直径	Pitch circle diameter output	D1		68 - 75	85	120	165	215		
输出端安装孔直径	Mounting bore output	D2	4x	5,5	6,5	9,0	11,0	13,5		
输出轴直径	Shaft diameter output	D3	k6	16	22	32	40	55		
输出轴轴肩直径	Shaft collar output	D4		21,5	31,5	41,5	57,5	76,5		
输出端定位凸台直径	Centering diameter output	D5	g7	60	70	90	130	160		
输出法兰对角线尺寸	Diagonal dimension output	D7		92	100	140	185	240		
输出端法兰外方	Flange cross section output	Q1	■	70	80	110	142	190		
最小总长	Min. total length	L1		134	157	202,5	261,5	310,5	1	
				162,5	179	224,5	292,5	355,5	2	
箱体长度	Housing length	L2		60,5	69,5	71	101,5	130,5	1	
				89	98	104,5	139	194	2	
输出端定位凸台深度	Centering depth output	L7		19	17,5	28	28	28		
输出端法兰厚度	Flange thickness output	L8		7	8	10	12	15		
中心孔 (DIN 332, DR 形)	Center hole (DIN 332, type DR)	C		M5x12,5	M8x19	M12x28	M16x36	M20x42		
电机轴直径 j6/k6	Motor shaft diameter j6/k6	D20		更多信息见第 155/156 页 More information on page 155/156						
输入端锁紧系统直径	Clamping system diameter input	D26								
带平键的输出轴 (DIN 6885-1)	Output shaft with feather key (DIN 6885-1)			A 5x5x25	A 6x6x28	A 10x8x50	A 12x8x65	A 16x10x70		A
平键宽度 (DIN 6885-1)	Feather key width (DIN 6885-1)	B1		5	6	10	12	16		
含平键在内的轴高 (DIN 6885-1)	Shaft height including feather key (DIN 6885-1)	H1		18	24,5	35	43	59		
输出轴轴长	Shaft length output	L3		48	56	88	110	112		
到轴肩的距离	Shaft length from shoulder	L4		28	36	58	80	82		
平键长度	Feather key length	L5		25	28	50	65	70		
到轴端的距离	Distance from shaft end	L6		2	4	4	8	6		
光滑输出轴	Smooth output shaft									B
输出轴轴长	Shaft length output	L3		48	56	88	110	112		
到轴肩的距离	Shaft length from shoulder	L4		28	36	58	80	82		
花键输出轴 (DIN 5480)	Splined output shaft (DIN 5480)			W16x0,8 x18x6m	W22x1,25 x16x6m	W32x1,25 x24x6m	W40x2,0 x18x6m	W55x2,0 x26x6m		C
花键或键槽的长度	Width of gearing	L_v		15	15	15	20	22		
输出轴轴长	Shaft length output	L3		46	46	56	70	71,5		
到轴肩的距离	Shaft length from shoulder	L4		26	26	26	40	41,5		

(2) 所有的尺寸单位为mm
(3) 减速机级数

(2) Dimensions in mm
(3) Number of stages

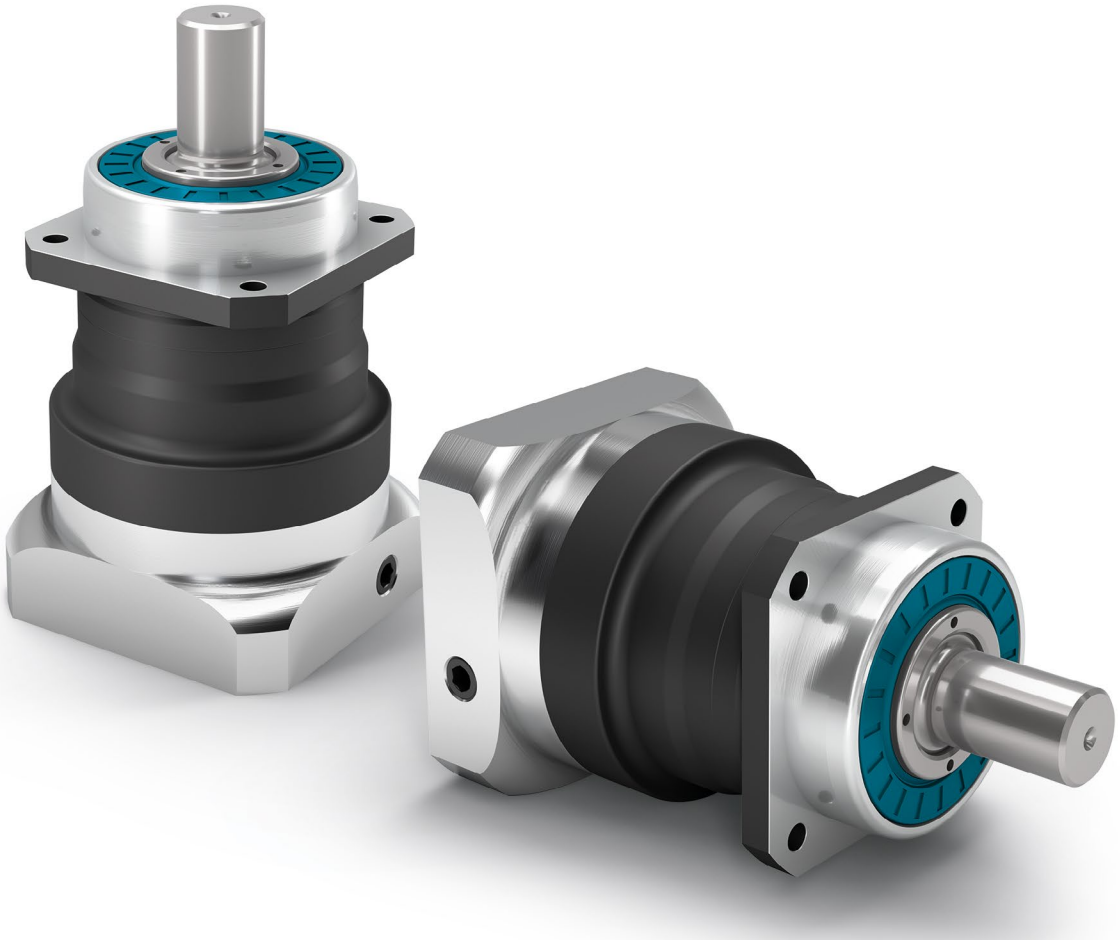

PLN

这款完全密封的直齿行星减速机能够提供极高的效能，且不会损失必要的刚性

这款直齿高精度行星减速机适用于需实现最高效能和扭矩的应用情况。**PLN**配有预紧的圆锥滚子轴承和我们自主研发的密封件保证了在有灰尘和喷溅水的环境下机器仍能提供最佳性能。

The perfectly sealed planetary gearbox with straight gearing delivers the maximum performance without ever losing the required stiffness

Our straight-toothed precision planetary gearbox has been designed for the highest performance and torque. The prestressed tapered roller bearings in the **PLN** and the seal we have developed safeguard the optimal performance even against dust and water jets.

额定扭矩 Nominal output torque	**27 - 1800 Nm**
径向力 Radial force	**3200 - 21000 N**
轴向力 Axial force	**4400 - 21000 N**
回程间隙 Torsional backlash	**1 - 5 arcmin**
防护等级 Protection class	**IP65**

结构尺寸
Frame sizes

70	**90**	**115**	**142**	**190**

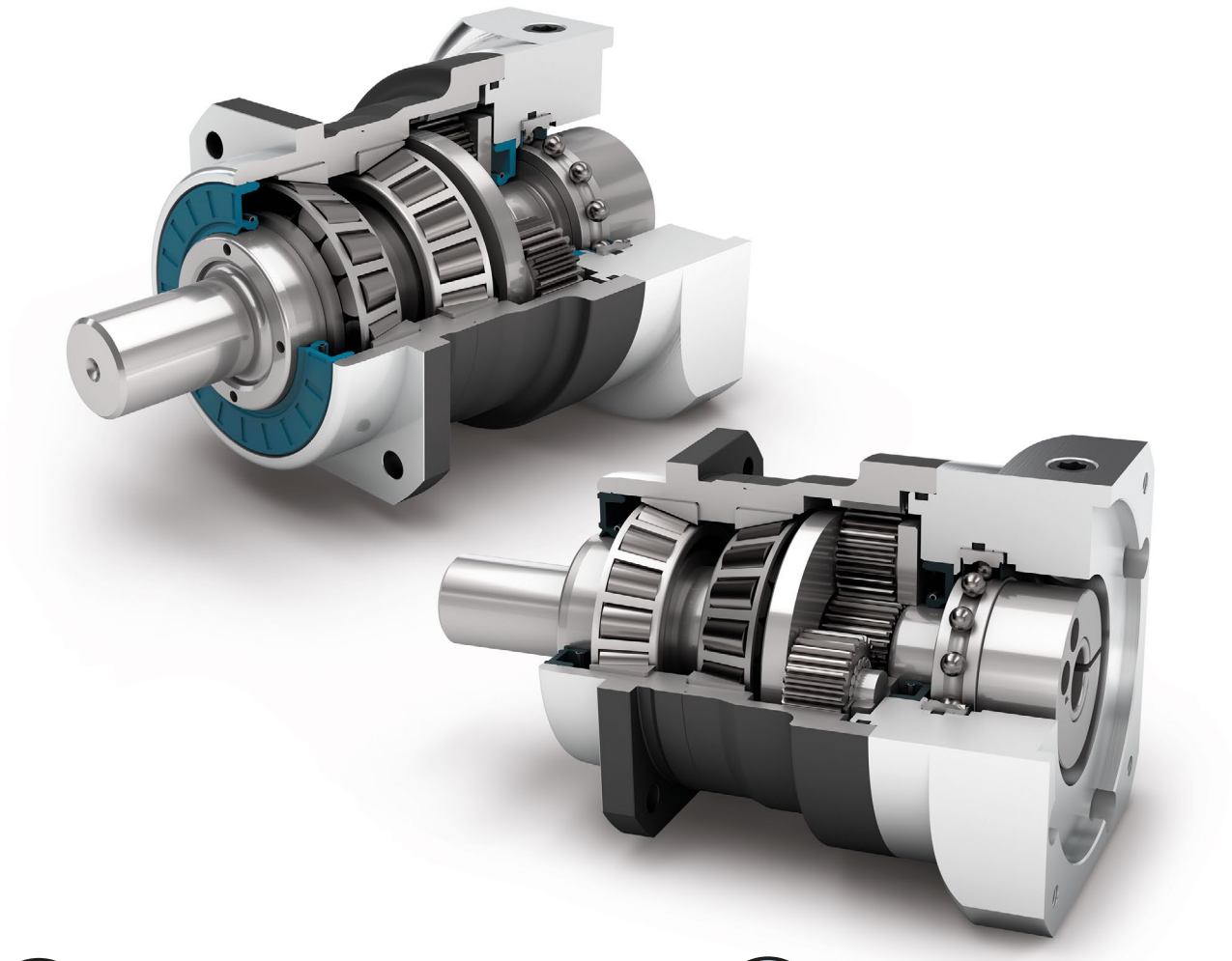

精密型
Precision Line

旋转方向 同方向
Equidirectional rotation

正方形输出法兰
Square type output flange

径向轴密封
Rotary shaft seal

行星齿轮架（笼状结构）
Planet carrier in cage design

可选：花键输出轴（DIN 5480）
Option: Splined output shaft (DIN 5480)

同轴减速机
Coaxial gearbox

直齿
Spur gear

配有预紧的圆锥滚子轴承
Preloaded tapered roller bearings

输出端带有超长定心环
Extra long centering collar

可选：降低回程间隙
Option: Reduced backlash

可选：装有小齿轮的高精度减速机 140页
Option: Planetary gearbox with mounted pinion on page 140

技术特点的详细解释，请从第169页读起。
Detailed explanations of the technical features starting on page 169.

Code	减速机参数	Gearbox characteristics			PLN070	PLN090	PLN115	PLN142	PLN190	p(1)
	使用寿命 (L_{10h})	Service life (L_{10h})	t_L	h	20.000					
	T_{2N} x 0,88 时的使用寿命	Service life at T_{2N} x 0,88			30.000					
	满载时效率(2)	Efficiency at full load(2)	η	%	98					1
					95					2
	最低工作温度	Min. operating temperature	T_{min}	°C	-25					
	最高工作温度	Max. operating temperature	T_{max}		90					
	防护等级	Protection class			IP65					
S	标准润滑	Standard lubrication			润滑油(终生润滑) / Oil (lifetime lubrication)					
F	食品级润滑	Food grade lubrication			润滑油(终生润滑) / Oil (lifetime lubrication)					
L	低温润滑(3)	Low temperature lubrication(3)			润滑油(终生润滑) / Oil (lifetime lubrication)					
	安装位置	Installation position			任意 / Any					
S	标准回程间隙	Standard backlash	j_t	arcmin	< 3					1
					< 5					2
R	降低回程间隙	Reduced backlash			< 2	< 1	< 1	< 1	< 1	
	抗扭刚度(2)	Torsional stiffness(2)	c_g	Nm / arcmin	3,4 - 5,0	9,4 - 12,4	22,0 - 29,0	61,0 - 76,0	155,0 - 218,0	1
					3,4 - 5,0	9,0 - 12,4	22,5 - 29,5	61,0 - 78,0	169,0 - 224,0	2
	减速机重量(2)	Gearbox weight(2)	m_G	kg	2,0	3,3 - 3,5	6,5 - 7,3	16,0 - 17,6	33,4 - 41,9	1
					2,5 - 2,6	4,1 - 4,3	8,2 - 9,0	21,4 - 22,0	45,4 - 49,6	2
S	标准的箱体表面	Standard surface			箱体:钢 – 热处理后氧化(黑色) Housing: Steel – heat-treated and post-oxidized (black)					
	运行噪音(4)	Running noise(4)	Q_g	dB(A)	60	62	65	70	74	
	基于减速机输入法兰的最大弯矩(5)	Max. bending moment based on the gearbox input flange(5)	M_b	Nm	18	38	80	180	300	

输出轴载荷	Output shaft loads			PLN070	PLN090	PLN115	PLN142	PLN190	p(1)
20,000 h 的径向力(6)(7)	Radial force for 20,000 h(6)(7)	$F_{r\,20.000\,h}$	N	3200	5500	6000	12500	21000	
20,000 h 的轴向力(6)(7)	Axial force for 20,000 h(6)(7)	$F_{a\,20.000\,h}$		4400	6400	8000	15000	21000	
30,000 h 的径向力(6)(7)	Radial force for 30,000 h(6)(7)	$F_{r\,30.000\,h}$		3200	4800	5400	11400	18000	
30,000 h 的轴向力(6)(7)	Axial force for 30,000 h(6)(7)	$F_{a\,30.000\,h}$		3900	5700	7000	13200	18500	
最大径向力(7)(8)	Maximum radial force(7)(8)	$F_{r\,Stat}$		3200	5500	6000	12500	21000	
最大轴向力(7)(8)	Maximum axial force(7)(8)	$F_{a\,Stat}$		4400	6400	8000	15000	21000	
20,000 h 倾斜力矩(6)(8)	Tilting moment for 20,000 h(6)(8)	$M_{K\,20.000\,h}$	Nm	191	383	488	1420	2535	
30,000 h 倾斜力矩(6)(8)	Tilting moment for 30,000 h(6)(8)	$M_{K\,30.000\,h}$		191	335	439	1295	2173	

转动惯量	Moment of inertia			PLN070	PLN090	PLN115	PLN142	PLN190	p(1)
转动惯量(2)	Mass moment of inertia(2)	J	$kgcm^2$	0,216 - 0,365	0,560 - 1,028	1,942 - 3,256	7,008 - 15,270	22,876 - 63,815	1
				0,209 - 0,249	0,544 - 0,699	1,933 - 2,373	6,811 - 9,813	22,430 - 36,003	2

(1) 减速机级数
(2) 传动比相关的数值可在 Tec Data Finder 中检索 – www.neugart.com
(3) T_{min} = -40°C. 理想运行温度最高为 50°C
(4) 距离减速机1 m 时; 在输入转速为 n_1=3000 min^{-1} 且无负荷时测得; i=5
(5) 最大电机重量* (单位 : kg) = 0.2 x M_b / 电机长度 (单位: m)
* 电机重量对称分布
* 水平和固定的安装位置
(6) 数据以 n_2=100 min^{-1} 的输出轴转速为准。
(7) 以输出轴中心为准
(8) 更改 T_{2N}, F_r, F_a 以及周期和轴承使用寿命时, 数值存在偏差(部分较高)。利用 NCP 针对应用进行专门设计 – www.neugart.com

(1) Number of stages
(2) The ratio-dependent values can be retrieved in Tec Data Finder – www.neugart.com
(3) T_{min} = -40°C. Optimal operating temperature max. 50°C
(4) Sound pressure level from 1 m, measured on input running at n_1=3000 rpm no load; i=5
(5) Max. motor weight* in kg = 0.2 x M_b / motor length in m
* with symmetrically distributed motor weight
* with horizontal and stationary mounting
(6) These values are based on an output shaft speed of n_2=100 rpm
(7) Based on center of output shaft
(8) Other (sometimes higher) values following changes to T_{2N}, F_r, F_a, cycle, and service life of bearing. Application specific configuration with NCP – www.neugart.com

输出扭矩	**Output torques**			**PLN070**	**PLN090**	**PLN115**	**PLN142**	**PLN190**	**i(1)**	**p(2)**
额定输出扭矩(3)(4)	Nominal output torque(3)(4)	T_{2N}	Nm	45	100	230	450	1000	3	1
				60	140	300	600	1300	4	
				65	140	260	750	1600	5	
				45	90	180	530	1300	7	
				40	80	150	450	1000	8	
				27	60	125	305	630	10	
				68	110	250	780	1500	12	2
				68	110	250	780	1500	15	
				77	150	300	1000	1800	16	
				77	150	300	1000	1800	20	
				65	140	260	900	1800	25	
				77	150	300	1000	1800	32	
				65	140	260	900	1800	40	
				40	80	150	450	1000	64	
				27	60	125	305	630	100	
最大输出扭矩(4)(5)	Max. output torque(4)(5)	T_{2max}	Nm	72	160	368	720	1600	3	1
				96	224	480	960	2080	4	
				104	224	416	1200	2560	5	
				72	144	288	848	2080	7	
				64	128	240	720	1600	8	
				43	96	200	488	1008	10	
				109	176	400	1248	2400	12	2
				109	176	400	1248	2400	15	
				123	240	480	1600	2880	16	
				123	240	480	1600	2880	20	
				104	224	416	1440	2880	25	
				123	240	480	1600	2880	32	
				104	224	416	1440	2880	40	
				64	128	240	720	1600	64	
				43	96	200	488	1008	100	

(1) 传动比 ($i=n_1/n_2$)
(2) 减速机级数
(3) 利用 NCP 针对应用进行专门设计 – www.neugart.com
(4) 平键 (代码 "A")时的数值: 针对交变载荷
(5) 允许输出轴转动30.000转; 参见第 158 页

(1) Ratios ($i=n_1/n_2$)
(2) Number of stages
(3) Application specific configuration with NCP – www.neugart.com
(4) Values for feather key (code "A"): for repeated load
(5) 30,000 rotations of the output shaft permitted; see page 159

输出扭矩	Output torques			PLN070	PLN090	PLN115	PLN142	PLN190	i(1)	p(2)
急停扭矩(3)	Emergency stop torque(3)	T_{2Stop}	Nm	90	210	490	975	2000	3	1
				120	280	650	1300	2700	4	
				130	280	650	1500	3200	5	
				80	175	340	1300	2600	7	
				90	200	380	1000	2600	8	
				90	200	480	750	1350	10	
				135	220	500	1500	3000	12	2
				135	220	500	1500	3000	15	
				150	300	650	2000	3600	16	
				150	300	650	2000	3600	20	
				150	300	650	1800	3600	25	
				150	300	650	2000	3600	32	
				150	300	650	1800	3600	40	
				80	200	380	1000	2600	64	
				80	200	480	750	1350	100	

输入转速	Input speeds			PLN070	PLN090	PLN115	PLN142	PLN190	i(1)	p(2)
T_{2N} 和 S1 时的平均热输入转速(4)(5)	Average thermal input speed at T_{2N} and S1(4)(5)	n_{1N}	min^{-1}	2050(6)	1950(6)	1500(6)	850(6)	700(6)	3	1
				2300(6)	2100(6)	1600(6)	950(6)	750(6)	4	
				2650(6)	2500(6)	2000(6)	1050(6)	850(6)	5	
				3450(6)	3550(6)	2800(6)	1550(6)	1200(6)	7	
				3800(6)	3950(6)	3200(6)	1800(6)	1450(6)	8	
				4400(6)	4000	3500(6)	2250(6)	1900(6)	10	
				3550(6)	3400(6)	2450(6)	1300(6)	1000(6)	12	2
				4000(6)	4000(6)	3000(6)	1600(6)	1250(6)	15	
				3800(6)	3550(6)	2550(6)	1350(6)	1050(6)	16	
				4300(6)	4000(6)	3050(6)	1600(6)	1300(6)	20	
				4500(6)	4000(6)	3400(6)	1850(6)	1400(6)	25	
				4500	4000	3500(6)	2300(6)	1900(6)	32	
				4500	4000	3500	2550(6)	2100(6)	40	
				4500	4000	3500	3000(6)	2500(6)	64	
				4500	4000	3500	3000	2500	100	
最高机械输入转速(4)	Max. mechanical input speed(4)	n_{1Limit}	min^{-1}	14000	10000	8500	6500	6000		1
				14000	10000	8500	6500	6000		2

PLN

(1) 传动比 ($i=n_1/n_2$)
(2) 减速机级数
(3) 允许 1000 次
(4) 利用 NCP 针对应用设计转速 – www.neugart.com
(5) 定义请参见第 158 页
(6) 在 50% T_{2N} 输出和 S1 模式下 的平均热传动转速

(1) Ratios ($i=n_1/n_2$)
(2) Number of stages
(3) Permitted 1000 times
(4) Application-specific speed configurations with NCP – www.neugart.com
(5) See page 159 for the definition
(6) Average thermal input speed at 50% T_{2N} and S1

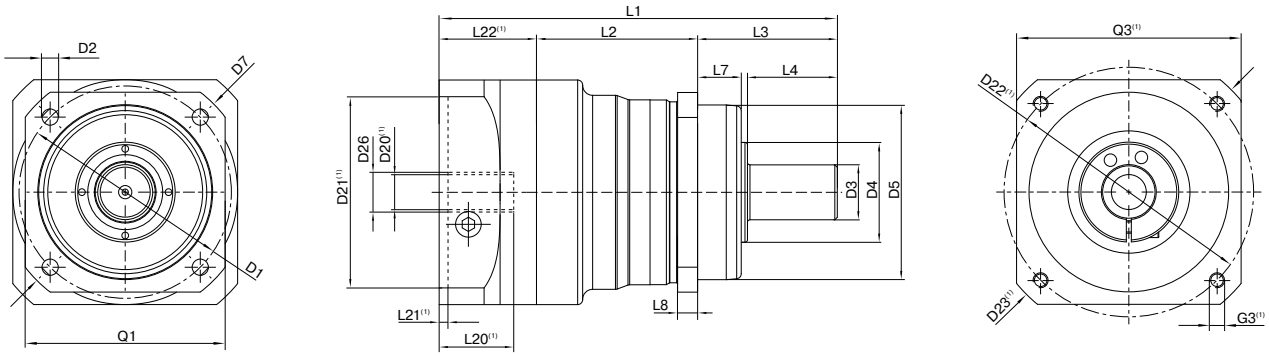

图示为带平键的 PLN090 / 1 级 / 光滑输出轴 / 19 mm 锁紧系统 / 适配电机法兰 – 2 件式 – 圆形通用法兰 / B5 电机法兰类型
Drawing corresponds to a PLN090 / 1-stage / smooth output shaft / 19 mm clamping system / motor adaptation – 2-part – round universal flange / B5 flange type motor

(1) 具体尺寸视电机/减速机法兰而定。可以在 www.neugart.com 下 Tec Data Finder。中针对每个电机适配电机特有的输入法兰几何尺寸。
(1) The dimensions vary with the motor/gearbox flange. The input flange dimensions can be retrieved for each specific motor in Tec Data Finder at www.neugart.com

几何尺寸(2)	**Geometry(2)**			**PLN070**	**PLN090**	**PLN115**	**PLN142**	**PLN190**	**p(3)**	**Code**
输出端安装孔节圆直径	Pitch circle diameter output	D1		68 - 75	85	120	165	215		
输出端安装孔直径	Mounting bore output	D2	4x	5,5	6,5	9,0	11,0	13,5		
输出轴直径	Shaft diameter output	D3	k6	16	22	32	40	55		
输出轴轴肩直径	Shaft collar output	D4		35	40	45	70	80		
输出端定位凸台直径	Centering diameter output	D5	g7	60	70	90	130	160		
输出法兰对角线尺寸	Diagonal dimension output	D7		92	100	140	185	240		
输出端法兰外方	Flange cross section output	Q1	■	70	80	110	142	190		
最小总长	Min. total length	L1		137,5	159,5	201	276	310,5	1	
				166,5	191,5	241	335	382,5	2	
箱体长度	Housing length	L2		58,5	64,5	61	91,5	116	1	
				88	96,5	101,5	150,5	188	2	
输出端定位凸台深度	Centering depth output	L7		19	17,5	28	28	28		
输出端法兰厚度	Flange thickness output	L8		7	8	10	12	15		
电机轴直径 j6/k6	Motor shaft diameter j6/k6	D20		更多信息见第 155/156 页 More information on page 155/156						
输入端锁紧系统直径	Clamping system diameter input	D26								
带平键的输出轴 (DIN 6885-1)	Output shaft with feather key (DIN 6885-1)			A 5x5x25	A 6x6x28	A 10x8x50	A 12x8x65	A 16x10x70		
平键宽度 (DIN 6885-1)	Feather key width (DIN 6885-1)	B1		5	6	10	12	16		
含平键在内的轴高 (DIN 6885-1)	Shaft height including feather key (DIN 6885-1)	H1		18	24,5	35	43	59		
输出轴轴长	Shaft length output	L3		48	56	88	110	112		**A**
到轴肩的距离	Shaft length from shoulder	L4		28	36	58	80	82		
平键长度	Feather key length	L5		25	28	50	65	70		
到轴端的距离	Distance from shaft end	L6		2	4	4	8	6		
中心孔 (DIN 332, DR 形)	Center hole (DIN 332, type DR)	C		M5x12,5	M8x19	M12x28	M16x36	M20x42		
光滑输出轴	Smooth output shaft									
输出轴轴长	Shaft length output	L3		48	56	88	110	112		**B**
到轴肩的距离	Shaft length from shoulder	L4		28	36	58	80	82		
花键输出轴 (DIN 5480)	Splined output shaft (DIN 5480)			W16x0,8 x18x6m	W22x1,25 x16x6m	W32x1,25 x24x6m	W40x2,0 x18x6m	W55x2,0 x26x6m		
花键或键槽的长度	Width of gearing	L_v		15	15	15	20	22		**C**
输出轴轴长	Shaft length output	L3		46	46	56	70	71,5		
到轴肩的距离	Shaft length from shoulder	L4		26	26	26	40	41,5		
中心孔 (DIN 332, DR 形)	Center hole (DIN 332, type DR)	C		M5x12,5	M8x19	M12x28	M16x36	M20x42		

(2) 所有的尺寸单位为mm
(3) 减速机级数

(2) Dimensions in mm
(3) Number of stages

PSFN

负载量最高的精密减速机
运行时十分安静
采用法兰输出轴

由于采用了标准化的法兰界面，**PSFN** 的安装非常便捷安全。我们研发的高精度斜齿轮让其他降噪措施毫无用武之地。由于其抗倾斜力矩很高，这款高精度行星减速机可以完成许多高难度任务。

The precision planetary gearbox for maximum loads with particularly quiet drive and flange output shaft

Thanks to its standardized flange interface, our **PSFN** can be installed easily and reliably. Our Neugart-designed helical teeth makes additional noise absorption measures absolute. Thanks to its high tilting moment, you may demand the utmost from this precision planetary gearbox.

额定扭矩 Nominal output torque	**28 - 950 Nm**
径向力 Radial force	**2150 - 23000 N**
轴向力 Axial force	**4300 - 16000 N**
回程间隙 Torsional backlash	**1 - 5 arcmin**
防护等级 Protection class	**IP65**

结构尺寸
Frame sizes

64 **90** **110** **140** **200**

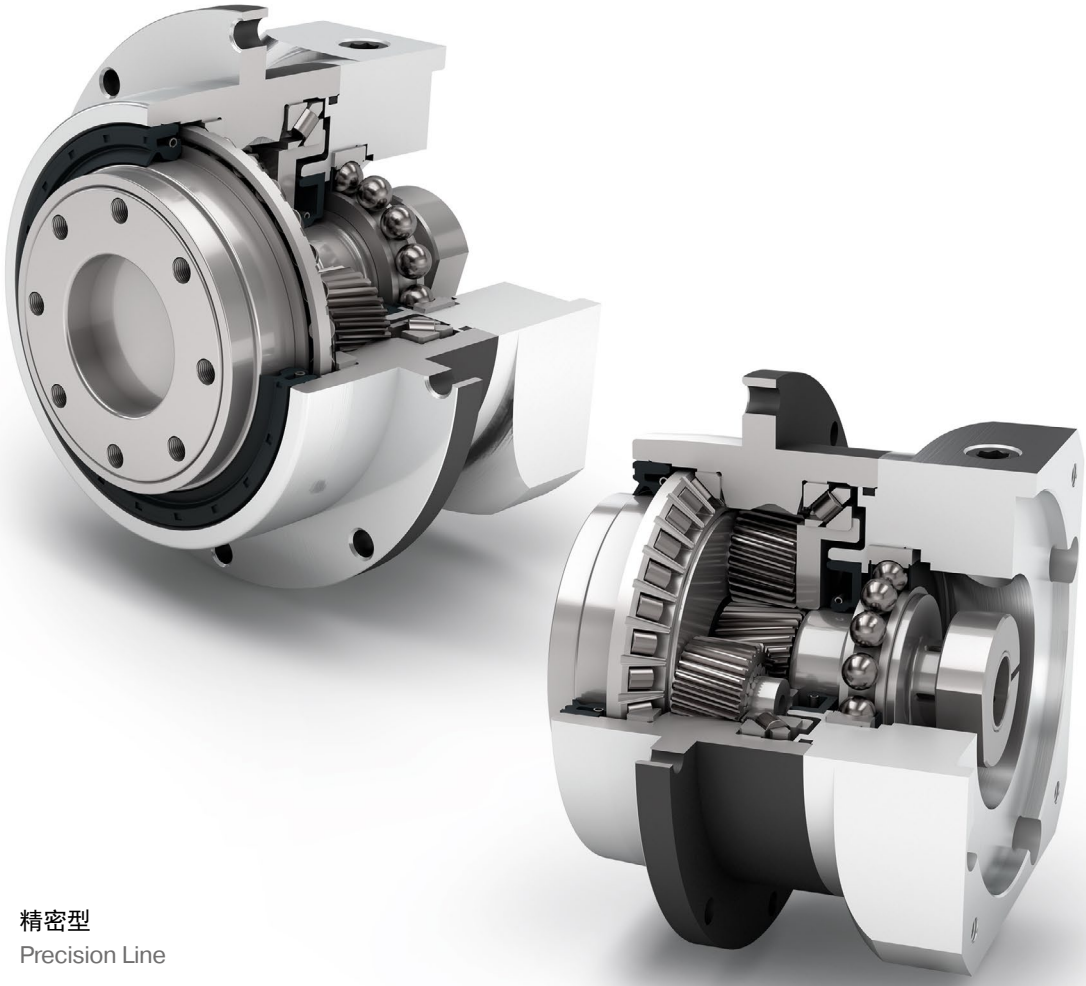

精密型
Precision Line

同轴减速机
Coaxial gearbox

旋转方向 同方向
Equidirectional rotation

斜齿
Helical gear

圆形特大号输出法兰
Extra large round type output flange

配有预紧的角接触滚子轴承
Preloaded angular contact roller bearings

径向轴密封
Rotary shaft seal

法兰输出轴（按 ISO 9409 标准）
Flange output shaft (ISO 9409)

行星齿轮架（笼状结构）
Planet carrier in cage design

可选：降低回程间隙
Option: Reduced backlash

可选：装有小齿轮的高精度减速机 140页
Option: Planetary gearbox with mounted pinion on page 140

技术特点的详细解释，请从第169页读起。
Detailed explanations of the technical features starting on page 169.

Code	减速机参数	Gearbox characteristics			PSFN064	PSFN090	PSFN110	PSFN140	PSFN200	p(1)
	使用寿命 (L_{10h})	Service life (L_{10h})	t_L	h	20000					
	T_{2N} x 0,88 时的使用寿命	Service life at T_{2N} x 0,88			30000					
	满载时效率(2)	Efficiency at full load(2)	η	%	97					1
					96					2
	最低工作温度	Min. operating temperature	T_{min}	°C	-25					
	最高工作温度	Max. operating temperature	T_{max}		90					
	防护等级	Protection class			IP65					
S	标准润滑	Standard lubrication			润滑油(终生润滑) / Oil (lifetime lubrication)					
F	食品级润滑	Food grade lubrication			润滑油(终生润滑) / Oil (lifetime lubrication)					
L	低温润滑(3)	Low temperature lubrication(3)			润滑油(终生润滑) / Oil (lifetime lubrication)					
	安装位置	Installation position			任意 / Any					
S	标准回程间隙	Standard backlash	j_t	arcmin	< 3					1
					< 5					2
R	降低回程间隙	Reduced backlash			< 2	< 1	< 1	< 1	< 1	
	抗扭刚度(2)	Torsional stiffness(2)	c_g	Nm / arcmin	8,2 - 11,8	21,0 - 27,5	55,0 - 62,0	129,0 - 218,0	374,0 - 602,0	1
					8,2 - 13,3	21,0 - 31,0	64,0 - 81,0	127,0 - 201,0	365,0 - 668,0	2
	减速机重量(2)	Gearbox weight(2)	m_G	kg	1,4	3,0	5,0 - 5,2	11,7 - 12,0	28,5 - 29,5	1
					2,0 - 2,1	3,6 - 3,7	6,3 - 6,5	13,4 - 13,8	33,6 - 34,8	2
S	标准的箱体表面	Standard surface			箱体:钢 – 热处理后氧化(黑色) Housing: Steel – heat-treated and post-oxidized (black)					
	运行噪音(4)	Running noise(4)	Q_g	dB(A)	57	58	63	66	68	
	基于减速机输入法兰的最大弯矩(5)	Max. bending moment based on the gearbox input flange(5)	M_b	Nm	18	38	80	180	300	1
					18	18	38	80	180	2

输出轴载荷	Output shaft loads			PSFN064	PSFN090	PSFN110	PSFN140	PSFN200	p(1)
20,000 h 的径向力(6)(7)	Radial force for 20,000 h(6)(7)	$F_{r\,20.000\,h}$	N	2150	3950	4900	12000	23000	
20,000 h 的轴向力(6)(7)	Axial force for 20,000 h(6)(7)	$F_{a\,20.000\,h}$		4300	8200	9500	8500	16000	
30,000 h 的径向力(6)(7)	Radial force for 30,000 h(6)(7)	$F_{r\,30.000\,h}$		1900	3500	4350	11000	21000	
30,000 h 的轴向力(6)(7)	Axial force for 30,000 h(6)(7)	$F_{a\,30.000\,h}$		3800	7200	8400	7500	14000	
最大径向力(7)(8)	Maximum radial force(7)(8)	$F_{r\,Stat}$		2150	3950	4900	12000	23000	
最大轴向力(7)(8)	Maximum axial force(7)(8)	$F_{a\,Stat}$		4300	8200	9500	8500	16000	
20,000 h 倾斜力矩(6)(8)	Tilting moment for 20,000 h(6)(8)	$M_{K\,20.000\,h}$	Nm	132	326	475	1030	2445	
30,000 h 倾斜力矩(6)(8)	Tilting moment for 30,000 h(6)(8)	$M_{K\,30.000\,h}$		117	289	422	944	2232	

转动惯量	Moment of inertia			PSFN064	PSFN090	PSFN110	PSFN140	PSFN200	p(1)
转动惯量(2)	Mass moment of inertia(2)	J	$kgcm^2$	0,128 - 0,188	0,342 - 0,611	0,892 - 1,741	6,526 - 9,670	22,520 - 40,642	1
				0,124 - 0,180	0,125 - 0,197	0,325 - 0,587	0,853 - 1,836	6,434 - 10,410	2

(1) 减速机级数
(2) 传动比相关的数值可在 Tec Data Finder 中检索 – www.neugart.com
(3) T_{min} = -40°C. 理想运行温度最高为 50°C
(4) 距离减速机1 m 时; 在输入转速为 n_1=3000 min^{-1} 且无负荷时测得; i=5
(5) 最大电机重量* (单位 : kg) = 0.2 x M_b / 电机长度 (单位: m)
* 电机重量对称分布
* 水平和固定的安装位置
(6) 数据以 n_2=100 min^{-1} 的输出轴转速为准。
(7) 以输出轴中心为准
(8) 更改 T_{2N}, F_r, F_a 以及周期和轴承使用寿命时; 数值存在偏差(部分较高)。利用 NCP 针对应用进行专门设计 – www.neugart.com

(1) Number of stages
(2) The ratio-dependent values can be retrieved in Tec Data Finder – www.neugart.com
(3) T_{min} = -40°C. Optimal operating temperature max. 50°C
(4) Sound pressure level from 1 m, measured on input running at n_1=3000 rpm no load; i=5
(5) Max. motor weight* in kg = 0.2 x M_b / motor length in m
* with symmetrically distributed motor weight
* with horizontal and stationary mounting
(6) These values are based on an output shaft speed of n_2=100 rpm
(7) Based on the end of the output shaft
(8) Other (sometimes higher) values following changes to T_{2N}, F_r, F_a, cycle, and service life of bearing. Application specific configuration with NCP – www.neugart.com

输出扭矩	Output torques			PSFN064	PSFN090	PSFN110	PSFN140	PSFN200	i(1)	p(2)
额定输出扭矩(3)	Nominal output torque(3)	T_{2N}	Nm	39	80	180	470	950	4	1
				40	80	175	405	950	5	
				37	78	175	355	900	7	
				28	59	140	305	750	10	
				39	80	180	450	950	16	2
				39	80	180	450	950	20	
				40	80	175	405	950	25	
				40	80	175	405	950	35	
				39	80	180	470	950	40	
				40	80	175	405	950	50	
				37	78	175	355	900	70	
				28	59	140	305	750	100	
最大输出扭矩(4)	Max. output torque(4)	T_{2max}	Nm	62	128	288	752	1520	4	1
				64	128	280	648	1520	5	
				59	125	280	568	1440	7	
				45	94	224	488	1200	10	
				62	128	288	720	1520	16	2
				62	128	288	720	1520	20	
				64	128	280	648	1520	25	
				64	128	280	648	1520	35	
				62	128	288	752	1520	40	
				64	128	280	648	1520	50	
				59	125	280	568	1440	70	
				45	94	224	488	1200	100	

(1) 传动比 ($i=n_1/n_2$)
(2) 减速机级数
(3) 利用 NCP 针对应用进行专门设计 – www.neugart.com
(4) 允许输出轴转动30.000转; 参见第 158 页

(1) Ratios ($i=n_1/n_2$)
(2) Number of stages
(3) Application specific configuration with NCP – www.neugart.com
(4) 30,000 rotations of the output shaft permitted; see page 159

输出扭矩	Output torques			PSFN064	PSFN090	PSFN110	PSFN140	PSFN200	i[1]	p[2]
急停扭矩[3]	Emergency stop torque[3]	T_{2Stop}	Nm	120	280	650	1650	3200	4	1
				130	280	650	1650	3200	5	
				80	175	340	1300	3200	7	
				90	200	480	600	1700	10	
				150	300	650	1650	3200	16	2
				150	300	650	1650	3200	20	
				150	300	650	1650	3200	25	
				150	300	650	1650	3200	35	
				150	300	650	1650	3200	40	
				150	300	650	1650	3200	50	
				80	175	340	1300	3200	70	
				90	200	480	600	1700	100	

输入转速	Input speeds			PSFN064	PSFN090	PSFN110	PSFN140	PSFN200	i[1]	p[2]
T_{2N} 和 S1 时的平均热输入转速[4][5]	Average thermal input speed at T_{2N} and S1[4][5]	n_{1N}	min^{-1}	3200[6]	2400[6]	1800[6]	1100[6]	750[6]	4	1
				3800[6]	2950[6]	2250[6]	1350[6]	950[6]	5	
				4500	3800[6]	2950[6]	1800[6]	1250[6]	7	
				4500	4000	3500	2300[6]	1700[6]	10	
				4500	4500	3800[6]	2450[6]	1550[6]	16	2
				4500	4500	4000	3050[6]	1900[6]	20	
				4500	4500	4000	3350[6]	2050[6]	25	
				4500	4500	4000	3500	2650[6]	35	
				4500	4500	4000	3500	3000[6]	40	
				4500	4500	4000	3500	3000	50	
				4500	4500	4000	3500	3000	70	
				4500	4500	4000	3500	3000	100	
最高机械输入转速[4]	Max. mechanical input speed[4]	n_{1Limit}	min^{-1}	14000	10000	8500	6500	6000		1
				14000	14000	10000	8500	6500		2

(1) 传动比 ($i=n_1/n_2$)
(2) 减速机级数
(3) 允许 1000 次
(4) 利用 NCP 针对应用设计转速 – www.neugart.com
(5) 定义请参见第 158 页
(6) 在 50% T_{2N} 输出和 S1 模式下 的平均热传动转速

(1) Ratios ($i=n_1/n_2$)
(2) Number of stages
(3) Permitted 1000 times
(4) Application-specific speed configurations with NCP – www.neugart.com
(5) See page 159 for the definition
(6) Average thermal input speed at 50% T_{2N} and S1

PSFN064
PSFN090

PSFN110

PSFN140
PSFN200

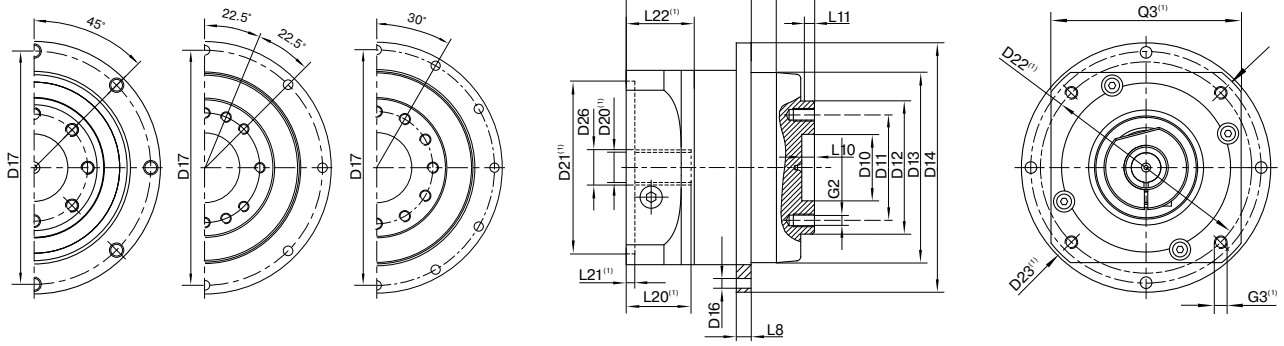

图示为带平键的 PSFN090 / 1 级 / 法兰输出轴 / 14 mm 锁紧系统 / 适配电机法兰 – 2 件式 – 圆形通用法兰 / B5 电机法兰类型
Drawing corresponds to a PSFN090 / 1-stage / flange output shaft / 14 mm clamping system / motor adaptation – 2-part – round universal flange / B5 flange type motor

(1) 具体尺寸视电机/减速机法兰而定。可以在 www.neugart.com 下 Tec Data Finder。中针对每个电机适配电机特有的输入法兰几何尺寸。
(1) The dimensions vary with the motor/gearbox flange. The input flange dimensions can be retrieved for each specific motor in Tec Data Finder at www.neugart.com

几何尺寸(2)	**Geometry(2)**			**PSFN064**	**PSFN090**	**PSFN110**	**PSFN140**	**PSFN200**	**p(3)**	**Code**
输出端定位凹槽直径	Centering diameter output shaft	D10	H7	20	31,5	40	50	80		
输出端安装孔节圆直径	Pitch circle diameter output shaft	D11		31,5	50	63	80	125		
法兰输出轴的直径	Flange output shaft diameter	D12	h7	40	63	80	100	160		
输出法兰定位凸台直径	Centering diameter output flange	D13		64	90	110	140	200		
输出法兰直径	Flange diameter output	D14		86	118	145	179	247		
输出端安装孔直径	Mounting bore output	D16		4,5 8x45°	5,5 8x45°	5,5 8x45°	6,6 12x30°	9 12x30°		
输出法兰安装孔节圆直径	Pitch circle diameter output flange	D17		79	109	135	168	233		
最小总长	Min. total length	L1		71	89,5	108	142	172	1	
				99,5	111,5	130	173	217	2	
输出端法兰厚度	Flange thickness output	L8		4	7	8	10	12		
输出轴定位凸台深度	Centering depth output shaft	L10		4,5	6,5	6,5	6,5	10		
		L11		3	6	6	6	7		
输出法兰定位凸台深度	Centering depth output flange	L12		10	12	12	14	17,5		
输出法兰长度	Output flange length	L13		19,5	30,0	29,0	38,0	50,0		
电机轴直径j6/k6	Motor shaft diameter j6/k6	D20		更多信息见第 155/156 页 More information on page 155/156						
输入端锁紧系统直径	Clamping system diameter input	D26								
法兰输出轴 (相似的 EN ISO 9409-1)	Flange output shaft (similar EN ISO 9409-1)									**D**
数量 x 螺纹 x 深度	Number x thread x depth	G2		8 x M5x7	8 x M6x10	12 x M6x12	12 x M8x15	12 x M10x20		
带有配合销孔的法兰输出轴 (EN ISO 9409-1)	Flange output shaft with dowel hole (EN ISO 9409-1)									**E**
配合销孔 x 深度	Dowel hole x depth	D15	H7	5x5	6x6	6x6	8x8	10x10		
数量 x 螺纹 x 深度	Number x thread x depth	G2		7 x M5x7	7 x M6x10	11 x M6x12	11 x M8x15	11 x M10x20		

(2) 所有的尺寸单位为mm
(3) 减速机级数

(2) Dimensions in mm
(3) Number of stages

PLFN

负载极大的精密减速机
且性能极高
安装便捷

PLFN 配有标准化的法兰接口，因此安装简便。这款直齿高精度行星减速机适用于需实现最高效能和扭矩的应用情况。其倾斜力矩很高，即使轴向和径向力极高，也能有出色表现。

The precision planetary gearbox for maximum loads and the highest performance – fast and easy to install

Our **PLFN** features a standardized flange interface for ease of installation. The straight-teeth precision planetary gearbox has been designed for the highest performance and torque. Its high tilting moment delivers the best performance even under the highest radial and axial forces.

额定扭矩 Nominal output torque	**27 - 1800 Nm**
径向力 Radial force	**2150 - 33000 N**
轴向力 Axial force	**4300 - 15000 N**
回程间隙 Torsional backlash	**1 - 5 arcmin**
防护等级 Protection class	**IP65**

结构尺寸
Frame sizes

64	**90**	**110**	**140**	**200**

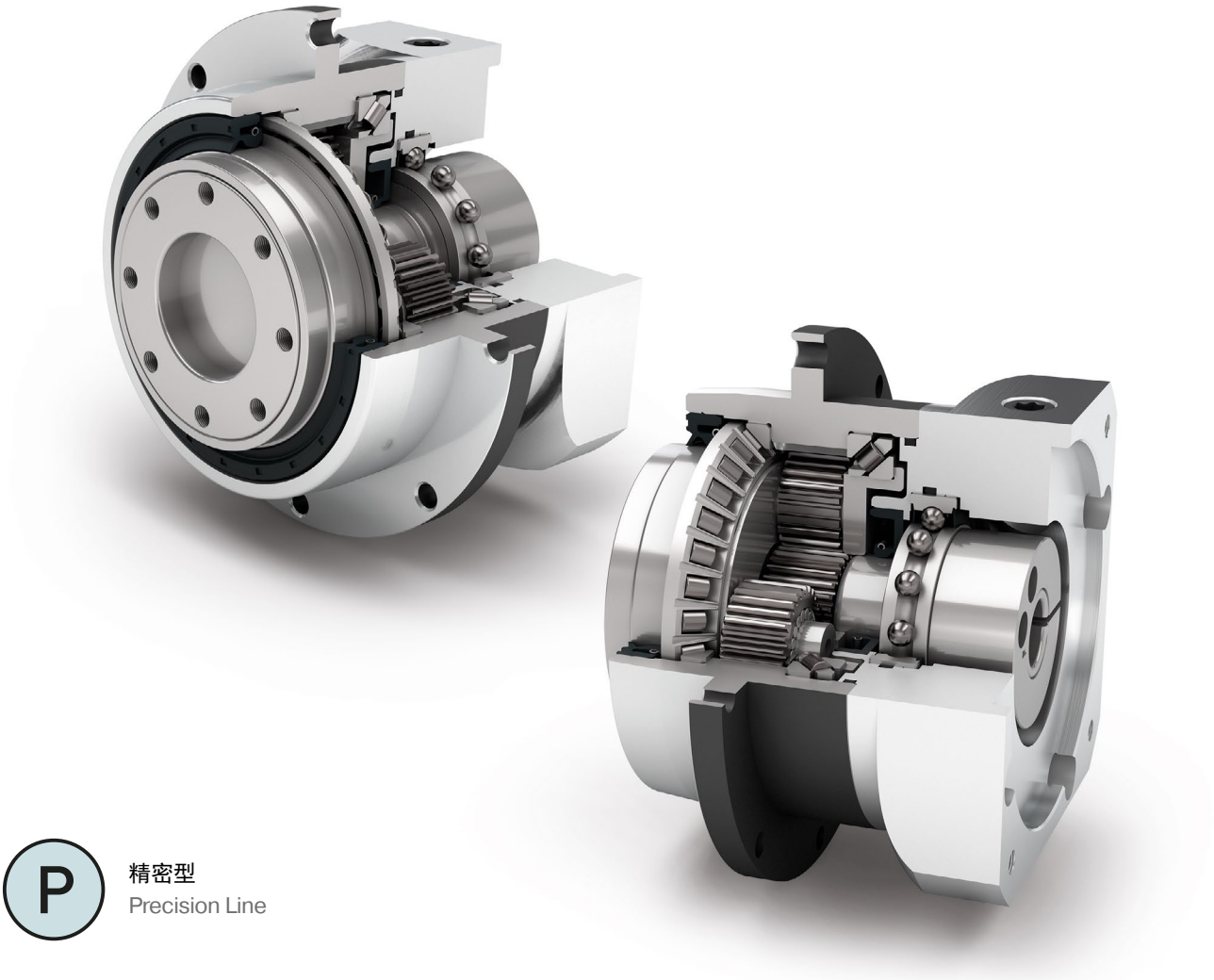

精密型
Precision Line

同轴减速机
Coaxial gearbox

旋转方向 同方向
Equidirectional rotation

直齿
Spur gear

圆形特大号输出法兰
Extra large round type output flange

配有预紧的角接触滚子轴承
Preloaded angular contact roller bearings

径向轴密封
Rotary shaft seal

法兰输出轴（按 ISO 9409 标准）
Flange output shaft (ISO 9409)

行星齿轮架（笼状结构）
Planet carrier in cage design

可选：降低回程间隙
Option: Reduced backlash

可选：装有小齿轮的高精度减速机 140页
Option: Planetary gearbox with mounted pinion on page 140

技术特点的详细解释，请从第169页读起。
Detailed explanations of the technical features starting on page 169.

Code	减速机参数	Gearbox characteristics			PLFN064	PLFN090	PLFN110	PLFN140	PLFN200	p(1)
	使用寿命 (L_{10h})	Service life (L_{10h})	t_L	h	20.000					
	T_{2N} x 0,88 时的使用寿命	Service life at T_{2N} x 0,88			30.000					
	满载时效率(2)	Efficiency at full load(2)	η	%	97					1
					96					2
	最低工作温度	Min. operating temperature	T_{min}	°C	-25					
	最高工作温度	Max. operating temperature	T_{max}		90					
	防护等级	Protection class			IP65					
S	标准润滑	Standard lubrication			润滑油(终生润滑) / Oil (lifetime lubrication)					
F	食品级润滑	Food grade lubrication			润滑油(终生润滑) / Oil (lifetime lubrication)					
L	低温润滑(3)	Low temperature lubrication(3)			润滑油(终生润滑) / Oil (lifetime lubrication)					
	安装位置	Installation position			任意 / Any					
S	标准回程间隙	Standard backlash	j_t	arcmin	< 3					1
					< 5					2
R	降低回程间隙	Reduced backlash			< 2	< 1	< 1	< 1	< 1	
	抗扭刚度(2)	Torsional stiffness(2)	c_g	Nm / arcmin	7,7 - 14,8	22,0 - 40,5	59,0 - 92,0	156,0 - 255,0	330,0 - 636,0	1
					7,6 - 14,7	18,5 - 38,0	58,0 - 91,0	177,0 - 264,0	391,0 - 656,0	2
	减速机重量(2)	Gearbox weight(2)	m_G	kg	1,3 - 1,4	2,9 - 3,0	5,0 - 5,3	12,9 - 13,5	37,0 - 39,2	1
					1,9	3,4 - 3,5	6,0 - 6,3	15,0 - 15,6	43,5 - 45,9	2
S	标准的箱体表面	Standard surface			箱体:钢 – 热处理后氧化(黑色) Housing: Steel – heat-treated and post-oxidized (black)					
	运行噪音(4)	Running noise(4)	Q_g	dB(A)	60	62	65	70	74	
	基于减速机输入法兰的最大弯矩(5)	Max. bending moment based on the gearbox input flange(5)	M_b	Nm	18	38	80	180	300	1
					18	18	38	80	180	2

输出轴载荷	Output shaft loads			PLFN064	PLFN090	PLFN110	PLFN140	PLFN200	p(1)
20,000 h 的径向力(6)(7)	Radial force for 20,000 h(6)(7)	$F_{r\,20.000\,h}$	N	2150	3950	4900	12000	33000	
20,000 h 的轴向力(6)(7)	Axial force for 20,000 h(6)(7)	$F_{a\,20.000\,h}$		4300	8200	9500	8500	15000	
30,000 h 的径向力(6)(7)	Radial force for 30,000 h(6)(7)	$F_{r\,30.000\,h}$		1900	3500	4350	11000	29500	
30,000 h 的轴向力(6)(7)	Axial force for 30,000 h(6)(7)	$F_{a\,30.000\,h}$		3800	7200	8400	7500	13500	
最大径向力(7)(8)	Maximum radial force(7)(8)	$F_{r\,Stat}$		2150	3950	4900	12000	33000	
最大轴向力(7)(8)	Maximum axial force(7)(8)	$F_{a\,Stat}$		4300	8200	9500	8500	15000	
20,000 h 倾斜力矩(6)(8)	Tilting moment for 20,000 h(6)(8)	$M_{K\,20.000\,h}$	Nm	132	326	475	1219	4957	
30,000 h 倾斜力矩(6)(8)	Tilting moment for 30,000 h(6)(8)	$M_{K\,30.000\,h}$		117	289	422	1117	4431	

转动惯量	Moment of inertia			PLFN064	PLFN090	PLFN110	PLFN140	PLFN200	p(1)
转动惯量(2)	Mass moment of inertia(2)	J	$kgcm^2$	0,217 - 0,288	0,580 - 0,920	2,036 - 2,942	7,313 - 12,365	26,880 - 61,170	1
				0,209 - 0,243	0,211 - 0,269	0,546 - 0,737	1,951 - 2,784	6,911 - 11,813	2

(1) 减速机级数
(2) 传动比相关的数值可在 Tec Data Finder 中检索 – www.neugart.com
(3) T_{min} = -40°C. 理想运行温度最高为 50°C
(4) 距离减速机1 m; 在输入转速为 n_1=3000 min^{-1} 且无负荷时测得; i=5
(5) 最大电机重量* (单位 : kg) = 0.2 x M_b / 电机长度 (单位: m)
* 电机重量对称分布
* 水平和固定的安装位置
(6) 数据以 n_2=100 min^{-1} 的输出轴转速为准。
(7) 以输出轴中心为准
(8) 更改 T_{2N}, F_r, F_a 以及周期和轴承使用寿命时, 数值存在偏差(部分较高)。利用 NCP 针对应用进行专门设计 – www.neugart.com

(1) Number of stages
(2) The ratio-dependent values can be retrieved in Tec Data Finder – www.neugart.com
(3) T_{min} = -40°C. Optimal operating temperature max. 50°C
(4) Sound pressure level from 1 m, measured on input running at n_1=3000 rpm no load; i=5
(5) Max. motor weight* in kg = 0.2 x M_b / motor length in m
* with symmetrically distributed motor weight
* with horizontal and stationary mounting
(6) These values are based on an output shaft speed of n_2=100 rpm
(7) Based on the end of the output shaft
(8) Other (sometimes higher) values following changes to T_{2N}, F_r, F_a, cycle, and service life of bearing. Application specific configuration with NCP – www.neugart.com

输出扭矩	**Output torques**			**PLFN064**	**PLFN090**	**PLFN110**	**PLFN140**	**PLFN200**	**i(1)**	**p(2)**
额定输出扭矩(3)	Nominal output torque(3)	T_{2N}	Nm	60	140	300	600	1300	4	1
				65	140	260	750	1600	5	
				45	90	180	530	1300	7	
				40	80	150	450	1000	8	
				27	60	125	305	630	10	
				77	150	300	1000	1800	16	2
				77	150	300	1000	1800	20	
				65	140	260	900	1800	25	
				77	150	300	600	1800	32	
				65	140	260	750	1800	40	
				65	130	260	620	1525	50	
				40	80	150	450	1000	64	
				27	60	125	305	630	100	
最大输出扭矩(4)	Max. output torque(4)	T_{2max}	Nm	96	224	480	960	2080	4	1
				104	224	416	1200	2560	5	
				72	144	288	848	2080	7	
				64	128	240	720	1600	8	
				43	96	200	488	1008	10	
				123	240	480	1600	2880	16	2
				123	240	480	1600	2880	20	
				104	224	416	1440	2880	25	
				123	240	480	960	2880	32	
				104	224	416	1200	2880	40	
				104	208	416	992	2440	50	
				64	128	240	720	1600	64	
				43	96	200	488	1008	100	

(1) 传动比 ($i=n_1/n_2$)
(2) 减速机级数
(3) 利用 NCP 针对应用进行专门设计 – www.neugart.com
(4) 允许输出轴转动30.000转; 参见第 158 页

(1) Ratios ($i=n_1/n_2$)
(2) Number of stages
(3) Application specific configuration with NCP – www.neugart.com
(4) 30,000 rotations of the output shaft permitted; see page 159

输出扭矩	Output torques			PLFN064	PLFN090	PLFN110	PLFN140	PLFN200	i[1]	p[2]
急停扭矩[3]	Emergency stop torque[3]	T_{2Stop}	Nm	120	280	650	1300	2700	4	1
				130	280	650	1500	3200	5	
				90	175	340	1300	2600	7	
				90	200	380	1000	2600	8	
				90	200	480	750	1350	10	
				150	300	650	2000	3600	16	2
				150	300	650	2000	3600	20	
				150	300	650	1800	3600	25	
				150	300	650	1500	3600	32	
				150	300	650	1500	3600	40	
				150	300	650	1500	3600	50	
				80	200	380	1000	2600	64	
				80	200	480	750	1350	100	

输入转速	Input speeds			PLFN064	PLFN090	PLFN110	PLFN140	PLFN200	i[1]	p[2]
T_{2N} 和 S1 时的平均热输入转速[4][5]	Average thermal input speed at T_{2N} and S1[4][5]	n_{1N}	min^{-1}	2100[6]	1750[6]	1300[6]	850[6]	500[6]	4	1
				2450[6]	2100[6]	1650[6]	950[6]	600[6]	5	
				3200[6]	3000[6]	2350[6]	1400[6]	850[6]	7	
				3550[6]	3350[6]	2650[6]	1650[6]	1000[6]	8	
				4100[6]	4000[6]	3150[6]	2050[6]	1300[6]	10	
				3700[6]	3850[6]	3150[6]	1700[6]	1100[6]	16	2
				4200[6]	4450[6]	3750[6]	2100[6]	1350[6]	20	
				4500[6]	4500[6]	4000[6]	2500[6]	1550[6]	25	
				4500[6]	4500	4000	3500[6]	2000[6]	32	
				4500	4500	4000	3500[6]	2250[6]	40	
				4500	4500	4000	3500	2750[6]	50	
				4500	4500	4000	3500	3000[6]	64	
				4500	4500	4000	3500	3000	100	
最高机械输入转速[4]	Max. mechanical input speed[4]	n_{1Limit}	min^{-1}	14000	10000	8500	6500	6000		1
				14000	14000	10000	8500	6500		2

PLFN

(1) 传动比 ($i=n_1/n_2$)
(2) 减速机级数
(3) 允许 1000 次
(4) 利用 NCP 针对应用设计转速 – www.neugart.com
(5) 定义请参见第 158 页
(6) 在 50% T_{2N} 输出和 S1 模式下 的平均热传动转速

(1) Ratios ($i=n_1/n_2$)
(2) Number of stages
(3) Permitted 1000 times
(4) Application-specific speed configurations with NCP – www.neugart.com
(5) See page 159 for the definition
(6) Average thermal input speed at 50% T_{2N} and S1

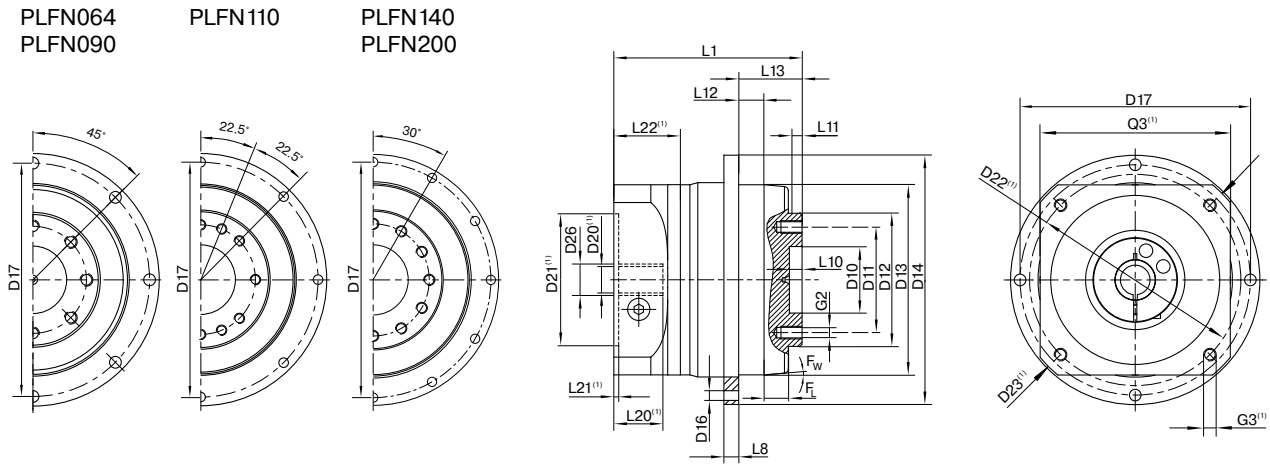

图示为带平键的 PLFN090 / 1 级 / 法兰输出轴 / 19 mm 锁紧系统 / 适配电机法兰 – 2 件式 – 圆形通用法兰 / B5 电机法兰类型
Drawing corresponds to a PLFN090 / 1-stage / flange output shaft / 19 mm clamping system / motor adaptation – 2-part – round universal flange / B5 flange type motor

(1) 具体尺寸视电机/减速机法兰而定。可以在 www.neugart.com 下 Tec Data Finder。中针对每个电机适配电机特有的输入法兰几何尺寸。
(1) The dimensions vary with the motor/gearbox flange. The input flange dimensions can be retrieved for each specific motor in Tec Data Finder at www.neugart.com

几何尺寸(2)	Geometry(2)			PLFN064	PLFN090	PLFN110	PLFN140	PLFN200	p(3)	Code
输出端定位凹槽直径	Centering diameter output shaft	D10	H7	20	31,5	40	50	80		
输出端安装孔节圆直径	Pitch circle diameter output shaft	D11		31,5	50	63	80	125		
法兰输出轴的直径	Flange output shaft diameter	D12	h7	40	63	80	100	160		
输出法兰定位凸台直径	Centering diameter output flange	D13		64	90	110	140	200		
输出法兰直径	Flange diameter output	D14		86	118	145	179	247		
输出端安装孔直径	Mounting bore output	D16		4,5 8x45°	5,5 8x45°	5,5 8x45°	6,6 12x30°	9 12x30°		
输出法兰安装孔节圆直径	Pitch circle diameter output flange	D17		79	109	135	168	233		
最小总长	Min. total length	L1		71	89	108	157	212,5	1	
				99,5	111	130	187,5	264	2	
输出端法兰厚度	Flange thickness output	L8		4	7	8	10	12		
输出轴定位凸台深度	Centering depth output shaft	L10		4,5	6,5	6,5	6,5	10		
		L11		3	6	6	6	8		
输出法兰定位凸台深度	Centering depth output flange	L12		10	12	12	14	17,5		
输出法兰长度	Output flange length	L13		19,5	30,0	29,0	38,0	50,0		
电机轴直径j6/k6	Motor shaft diameter j6/k6	D20		更多信息见第 155/156 页 More information on page 155/156						
输入端锁紧系统直径	Clamping system diameter input	D26								
法兰输出轴（相似的 EN ISO 9409-1)	Flange output shaft (similar EN ISO 9409-1)									D
数量 x 螺纹 x 深度	Number x thread x depth	G2		8 x M5x7	8 x M6x10	12 x M6x12	12 x M8x15	12 x M10x20		
带有配合销孔的法兰输出轴 (EN ISO 9409-1)	Flange output shaft with dowel hole (EN ISO 9409-1)									
配合销孔 x 深度	Dowel hole x depth	D15	H7	5x5	6x6	6x6	8x8	10x10		E
数量 x 螺纹 x 深度	Number x thread x depth	G2		7 x M5x7	7 x M6x10	11 x M6x12	11 x M8x15	11 x M10x20		

(2) 所有的尺寸单位为mm
(3) 减速机级数

(2) Dimensions in mm
(3) Number of stages

WPLN

直角减速机
配有准双曲面齿轮，因此运行时十分安静

借助其准双曲面齿轮，**WPLN** 的同步运行性能得到了优化，应用设备工件加工表面质量也可达到最高水平。由于振动幅度降至最低，**WPLN** 运行时十分稳定且安静。这款高精度直角减速机终生润滑免维护，且可安装在任意位置。

The versatile right angle gearbox with spiral gearing for a quiet drive

Thanks to its spiral teeth, our **WPLN** achieves the optimal synchronism for the best surface qualities. By minimizing vibrations, it runs uniformly and quietly. The precision right angle planetary gearbox features lifetime lubrication and can be mounted virtually anywhere.

额定扭矩 Nominal output torque	**22 - 800 Nm**
径向力 Radial force	**3200 - 12500 N**
轴向力 Axial force	**4300 - 15000 N**
回程间隙 Torsional backlash	**3 - 5 arcmin**
防护等级 Protection class	**IP65**

结构尺寸
Frame sizes

70	**90**	**115**	**142**

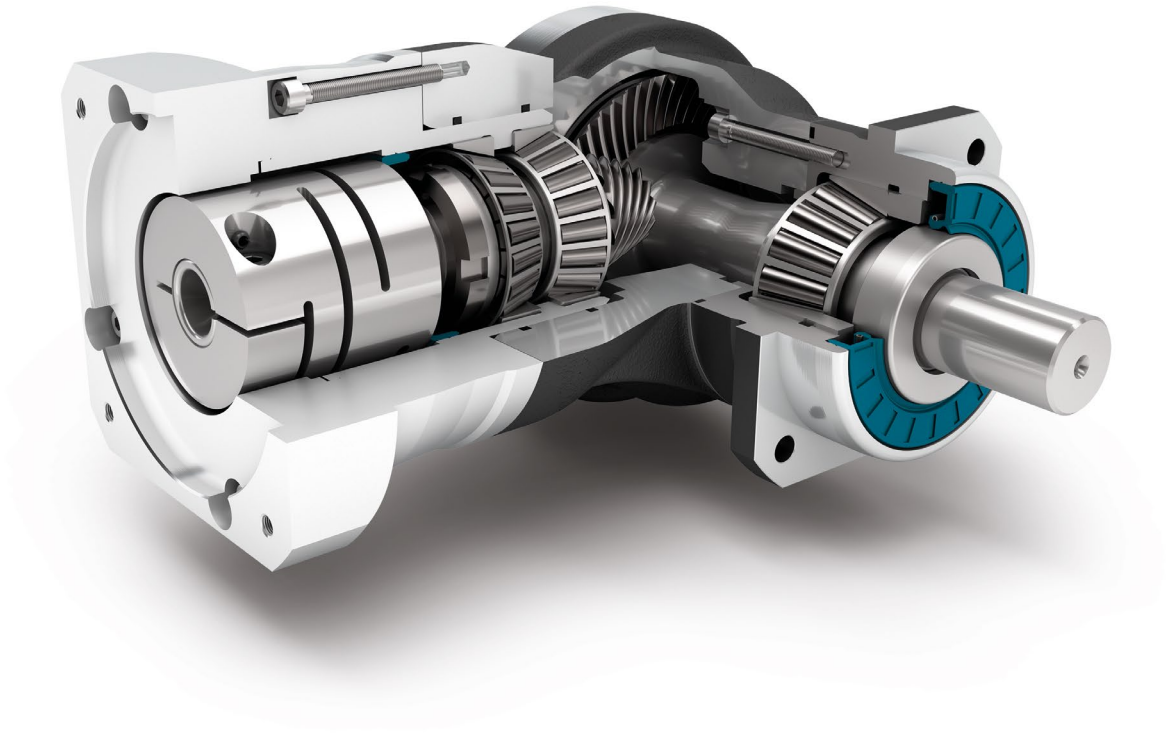

精密型
Precision Line

直角型减速机
Right angle gearbox

旋转方向 反方向
Counterdirectional rotation

准双曲面齿轮 直角箱
Hypoid gear right angle stage

正方形输出法兰
Square type output flange

配有预紧的圆锥滚子轴承
Preloaded tapered roller bearings

径向轴密封
Rotary shaft seal

输出端带有超长定心环
Extra long centering collar

可选：降低回程间隙（2级）
Option: Reduced backlash (2-stage)

可选：装有小齿轮的高精度减速机 140页
Option: Planetary gearbox with mounted pinion on page 140

技术特点的详细解释，请从第169页读起。
Detailed explanations of the technical features starting on page 169.

Code	减速机参数	Gearbox characteristics			WPLN070	WPLN090	WPLN115	WPLN142	p[1]
	使用寿命 (L_{10h})	Service life (L_{10h})	t_L	h	20.000				
	T_{2N} x 0,88 时的使用寿命	Service life at T_{2N} x 0,88			30.000				
	满载时效率[2]	Efficiency at full load[2]	η	%	95				1
					94				2
	最低工作温度	Min. operating temperature	T_{min}	°C	-25				
	最高工作温度	Max. operating temperature	T_{max}		90				
	防护等级	Protection class			IP65				
S	标准润滑	Standard lubrication			润滑油（终生润滑）/ Oil (lifetime lubrication)				
F	食品级润滑	Food grade lubrication			润滑油（终生润滑）/ Oil (lifetime lubrication)				
	安装位置	Installation position			任意 / Any				
S	标准回程间隙	Standard backlash	j_t	arcmin	< 5				
R	降低回程间隙	Reduced backlash			-				1
					< 3				2
	抗扭刚度[2]	Torsional stiffness[2]	c_g	Nm / arcmin	1,8 - 3,1	4,6 - 7,0	8,6 - 13,5	24,5 - 34,0	1
					2,3 - 3,6	5,9 - 8,6	11,3 - 16,9	31,5 - 42,5	2
	减速机重量[2]	Gearbox weight[2]	m_G	kg	3,4	5,4 - 5,9	11,3	25,9 - 26,5	1
					4,4 - 4,5	5,8 - 5,9	10,4 - 10,7	24,6 - 25,2	2
S	标准的箱体表面	Standard surface			直角箱体: 铝 – 阳极氧化处理（黑色） Right angle housing: Aluminum – anodized (black)				
	运行噪音[3]	Running noise[3]	Q_g	dB(A)	66	67	68	70	
	基于减速机输入法兰的最大弯矩[4]	Max. bending moment based on the gearbox input flange[4]	M_b	Nm	12	25,5	53	120	1
					12	12	25,5	53	2

输出轴载荷	Output shaft loads			WPLN070	WPLN090	WPLN115	WPLN142	p[1]
20,000 h 的径向力[5][6]	Radial force for 20,000 h[5][6]	$F_{r\,20.000\,h}$	N	3200	5200	6000	12500	1
				3200	5500	6000	12500	2
20,000 h 的轴向力[5][6]	Axial force for 20,000 h[5][6]	$F_{a\,20.000\,h}$		4300	5900	7000	14500	1
				4400	6400	8000	15000	2
30,000 h 的径向力[5][6]	Radial force for 30,000 h[5][6]	$F_{r\,30.000\,h}$		3200	5200	6000	10900	1
				3200	4800	5400	11400	2
30,000 h 的轴向力[5][6]	Axial force for 30,000 h[5][6]	$F_{a\,30.000\,h}$		3700	5200	6100	12000	1
				3900	5700	7000	13200	2
最大径向力[6][7]	Maximum radial force[6][7]	$F_{r\,Stat}$		3200	5200	6000	12500	1
				3200	5500	6000	12500	2
最大轴向力[6][7]	Maximum axial force[6][7]	$F_{a\,Stat}$		4300	5900	7000	14500	1
				4400	6400	8000	15000	2
20,000 h 倾斜力矩[5][7]	Tilting moment for 20,000 h[5][7]	$M_{K\,20.000\,h}$	Nm	322	624	1010	2225	1
				322	660	1010	2225	2
30,000 h 倾斜力矩[5][7]	Tilting moment for 30,000 h[5][7]	$M_{K\,30.000\,h}$		322	624	1010	1940	1
				322	576	909	2029	2

转动惯量	Moment of inertia			WPLN070	WPLN090	WPLN115	WPLN142	p[1]
转动惯量[2]	Mass moment of inertia[2]	J	$kgcm^2$	0,500 - 0,658	1,013 - 1,387	4,767 - 5,875	15,090 - 20,883	1
				0,498 - 0,642	0,497 - 0,649	1,014 - 1,419	4,807 - 6,387	2

WPLN

(1) 减速机级数
(2) 传动比相关的数值可在 Tec Data Finder 中检索 – www.neugart.com
(3) 距离减速机1 m 时; 在输入转速为 n_1=3000 min^{-1} 且无负荷时测得; i=5
(4) 最大电机重量* (单位 : kg) = 0.2 x M_b / 电机长度 (单位: m)
* 电机重量对称分布
* 水平和固定的安装位置
(5) 数据以 n_2=100 min^{-1} 的输出轴转速为准。
(6) 以输出轴中心为准
(7) 更改 T_{2N}, F_r, F_a 以及周期和轴承使用寿命时; 数值存在偏差（部分较高）。利用 NCP 针对应用进行专门设计 – www.neugart.com

(1) Number of stages
(2) The ratio-dependent values can be retrieved in Tec Data Finder – www.neugart.com
(3) Sound pressure level from 1 m, measured on input running at n_1=3000 rpm no load; i=5
(4) Max. motor weight* in kg = 0.2 x M_b / motor length in m
* with symmetrically distributed motor weight
* with horizontal and stationary mounting
(5) These values are based on an output shaft speed of n_2=100 rpm
(6) Based on center of output shaft
(7) Other (sometimes higher) values following changes to T_{2N}, F_r, F_a, cycle, and service life of bearing. Application specific configuration with NCP – www.neugart.com

输出扭矩	**Output torques**			**WPLN070**	**WPLN090**	**WPLN115**	**WPLN142**	**i(1)**	**p(2)**
额定输出扭矩(3)(4)	Nominal output torque(3)(4)	T_{2N}	Nm	45	90	160	320	4	1
				42	75	140	280	5	
				28	51	91	189	7	
				27	50	90	180	8	
				22	40	75	160	10	
				77	150	300	640	16	2
				77	150	300	800	20	
				65	140	260	700	25	
				60	112	204	364	28	
				77	108	200	360	32	
				65	140	255	455	35	
				65	135	250	450	40	
				65	110	200	375	50	
				40	80	150	450	64	
				27	60	125	305	100	
最大输出扭矩(4)(5)	Max. output torque(4)(5)	T_{2max}	Nm	72	144	256	512	4	1
				67	120	224	448	5	
				45	82	145	302	7	
				43	80	144	288	8	
				35	64	120	256	10	
				123	240	480	1024	16	2
				123	240	480	1280	20	
				104	224	416	1120	25	
				96	180	328	580	28	
				123	172	320	576	32	
				104	224	410	725	35	
				104	216	400	720	40	
				104	176	320	600	50	
				64	128	240	720	64	
				43	96	200	488	100	

(1) 传动比 ($i=n_1/n_2$)
(2) 减速机级数
(3) 利用 NCP 针对应用进行专门设计 – www.neugart.com
(4) 平键 (代码 "A")时的数值: 针对交变载荷
(5) 允许输出轴转动30.000转; 参见第 158 页

(1) Ratios ($i=n_1/n_2$)
(2) Number of stages
(3) Application specific configuration with NCP – www.neugart.com
(4) Values for feather key (code "A"): for repeated load
(5) 30,000 rotations of the output shaft permitted; see page 159

输出扭矩	Output torques			WPLN070	WPLN090	WPLN115	WPLN142	i[1]	p[2]
急停扭矩[3]	Emergency stop torque[3]	T_{2Stop}	Nm	100	200	400	800	4	1
				100	200	400	800	5	
				75	150	300	700	7	
				75	150	300	700	8	
				75	150	300	700	10	
				150	300	650	1600	16	2
				150	300	650	1600	20	
				150	300	650	1600	25	
				120	280	600	1200	28	
				150	300	600	1200	32	
				130	280	650	1500	35	
				150	300	650	1500	40	
				150	300	600	1200	50	
				80	200	380	1000	64	
				80	200	480	750	100	

输入转速	Input speeds			WPLN070	WPLN090	WPLN115	WPLN142	i[1]	p[2]
T_{2N} 和 S1 时的平均热输入转速[4][5]	Average thermal input speed at T_{2N} and S1[4][5]	n_{1N}	min^{-1}	1800[6]	1650[6]	1150[6]	950[6]	4	1
				2000[6]	1900[6]	1250[6]	1000[6]	5	
				2350[6]	2250[6]	1400[6]	1200[6]	7	
				2350[6]	2250[6]	1450[6]	1200[6]	8	
				2500[6]	2400[6]	1500[6]	1300[6]	10	
				1850[6]	1800[6]	1650[6]	1000[6]	16	2
				2000[6]	2100[6]	1950[6]	1050[6]	20	
				2150[6]	2250[6]	2150[6]	1150[6]	25	
				2200[6]	2250[6]	2150[6]	1400[6]	28	
				2300[6]	2300[6]	2200[6]	1400[6]	32	
				2350[6]	2300[6]	2200[6]	1400[6]	35	
				2400[6]	2300[6]	2250[6]	1450[6]	40	
				2500[6]	2450[6]	2400[6]	1550[6]	50	
				2600[6]	2950[6]	2850[6]	1750[6]	64	
				2700[6]	3100[6]	3050[6]	1900[6]	100	
最高机械输入转速[4]	Max. mechanical input speed[4]	n_{1Limit}	min^{-1}	16000	14000	9500	8000		1
				16000	16000	14000	9500		2

WPLN

(1) 传动比 ($i=n_1/n_2$)
(2) 减速机级数
(3) 允许 1000 次
(4) 利用 NCP 针对应用设计转速 – www.neugart.com
(5) 定义请参见第 158 页
(6) 在 50% T_{2N} 输出和 S1 模式下 的平均热传动转速

(1) Ratios ($i=n_1/n_2$)
(2) Number of stages
(3) Permitted 1000 times
(4) Application-specific speed configurations with NCP – www.neugart.com
(5) See page 159 for the definition
(6) Average thermal input speed at 50% T_{2N} and S1

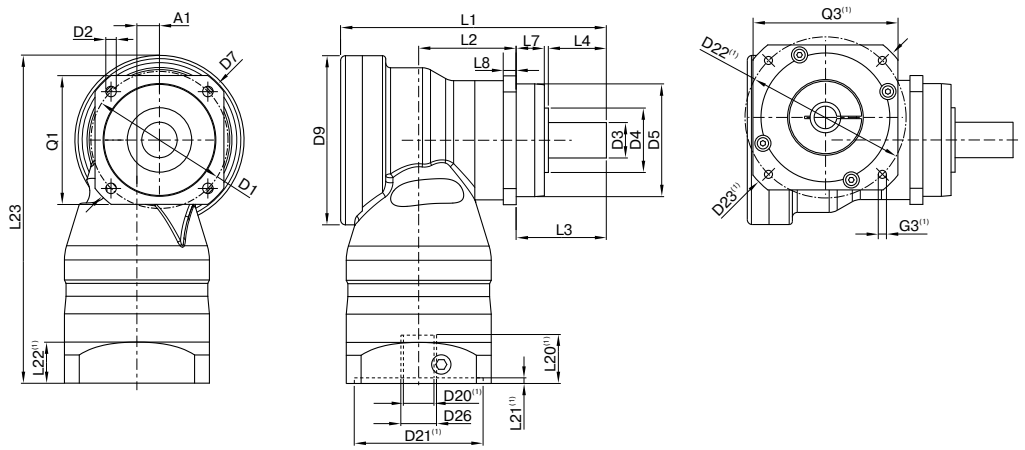

图示为带平键的 WPLN090 / 1 级 / 光滑输出轴 / 19 mm 锁紧系统 / 适配电机法兰 – 2 件式 – 圆形通用法兰 / B5 电机法兰类型
Drawing corresponds to a WPLN090 / 1-stage / smooth output shaft / 19 mm clamping system / motor adaptation – 2-part – round universal flange / B5 flange type motor

(1) 具体尺寸视电机/减速机法兰而定。可以在 www.neugart.com 下 Tec Data Finder。中针对每个电机适配电机特有的输入法兰几何尺寸。
(1) The dimensions vary with the motor/gearbox flange. The input flange dimensions can be retrieved for each specific motor in Tec Data Finder at www.neugart.com

几何尺寸(2)	Geometry(2)			WPLN070	WPLN090	WPLN115	WPLN142	p(3)	Code
轴向偏差	Axis offset	A1		10	14	20	26	1	
				10	10	14	20	2	
输出端安装孔节圆直径	Pitch circle diameter output	D1		68 - 75	85	120	165		
输出端安装孔直径	Mounting bore output	D2	4x	5,5	6,5	9,0	11,0		
输出轴直径	Shaft diameter output	D3	k6	16	22	32	40		
输出轴轴肩直径	Shaft collar output	D4		30	40	45	70	1	
				35	40	45	70	2	
输出端定位凸台直径	Centering diameter output	D5	g7	60	70	90	130		
输出法兰对角线尺寸	Diagonal dimension output	D7		92	100	140	185		
最大直径	Max. diameter	D9		86	105	120	170	1	
				86	86	105	120	2	
输出端法兰外方	Flange cross section output	Q1	■	70	80	110	142		
总长	Total length	L1		137,5	165	218	273	1	
				185	207	248,5	342,5	2	
箱体长度	Housing length	L2		46,5	60,5	73,5	76	1	
				94	108	112	176	2	
输出轴轴长	Shaft length output	L3		48	56	88	110		
输出端定位凸台深度	Centering depth output	L7		18	17,5	28	28	1	
				19	17,5	28	28	2	
输出端法兰厚度	Flange thickness output	L8		7	8	10	12		
偏差距离	Offset length	L9		43	48,5	56,5	87	1	
				43	43	48,5	56,5	2	
最小总高度	Min. overall height	L23		179,0	203,5	247,5	318,0	1	
				179,0	182,5	210,0	258,5	2	
电机轴直径j6/k6	Motor shaft diameter j6/k6	D20		更多信息见第 155/156 页 More information on page 155/156					
输入端锁紧系统直径	Clamping system diameter input	D26							
带平键的输出轴 (DIN 6885-1)	Output shaft with feather key (DIN 6885-1)			A 5x5x25	A 6x6x28	A 10x8x50	A 12x8x65		A
平键宽度 (DIN 6885-1)	Feather key width (DIN 6885-1)	B1		5	6	10	12		
含平键在内的轴高 (DIN 6885-1)	Shaft height including feather key (DIN 6885-1)	H1		18	24,5	35	43		
到轴肩的距离	Shaft length from shoulder	L4		28	36	58	80		
平键长度	Feather key length	L5		25	28	50	65		
到轴端的距离	Distance from shaft end	L6		2	4	4	8		
中心孔 (DIN 332, DR 形)	Center hole (DIN 332, type DR)	C		M5x12,5	M8x19	M12x28	M16x36		
光滑输出轴	Smooth output shaft								B
到轴肩的距离	Shaft length from shoulder	L4		28	36	58	80		
花键输出轴 (DIN 5480)	Splined output shaft (DIN 5480)			W16x0,8 x18x6m	W22x1,25 x16x6m	W32x1,25 x24x6m	W40x2,0 x18x6m		C
花键或键槽的长度	Width of gearing	L_v		15	15	15	20		
输出轴轴肩直径	Shaft collar output	L3		48	56	88	110		
到轴肩的距离	Shaft length from shoulder	L4		28	36	58	80		
中心孔 (DIN 332, DR 形)	Center hole (DIN 332, type DR)	C		M5x12,5	M8x19	M12x28	M16x36		

(2) 所有的尺寸单位为mm
(3) 减速机级数

(2) Dimensions in mm
(3) Number of stages

WPSFN

配有法兰输出轴和空心轴的最短准双曲面齿轮直角型减速机

我们的 **WPSFN** 系列凭借其标准化的法兰接口能够极其轻松快速地集成到系统当中。通过准双曲面齿轮以及斜齿行星系统，大大优化了同步运行性能以实现最佳的加工表面质量。最短的直角型精密减速机，搭配集成的空心轴输出方式，带给您新的输出端连接解决方案。

The shortest spiral right angle gearbox with flange output shaft and hollow shaft

Our **WPSFN** is extremely light and easy to integrate thanks to its standardized flange interface. It achieves optimized synchronization with the spiral gearing and the helical-toothed planetary stage for the best surface qualities. The shortest right angle precision gearbox with integrated hollow shaft provides you with new structural solutions.

额定扭矩 Nominal output torque	**22 - 625 Nm**
径向力 Radial force	**2150 - 12000 N**
轴向力 Axial force	**4200 - 9500 N**
回程间隙 Torsional backlash	**3 - 5 arcmin**
防护等级 Protection class	**IP65**

结构尺寸
Frame sizes

64 **90** **110** **140**

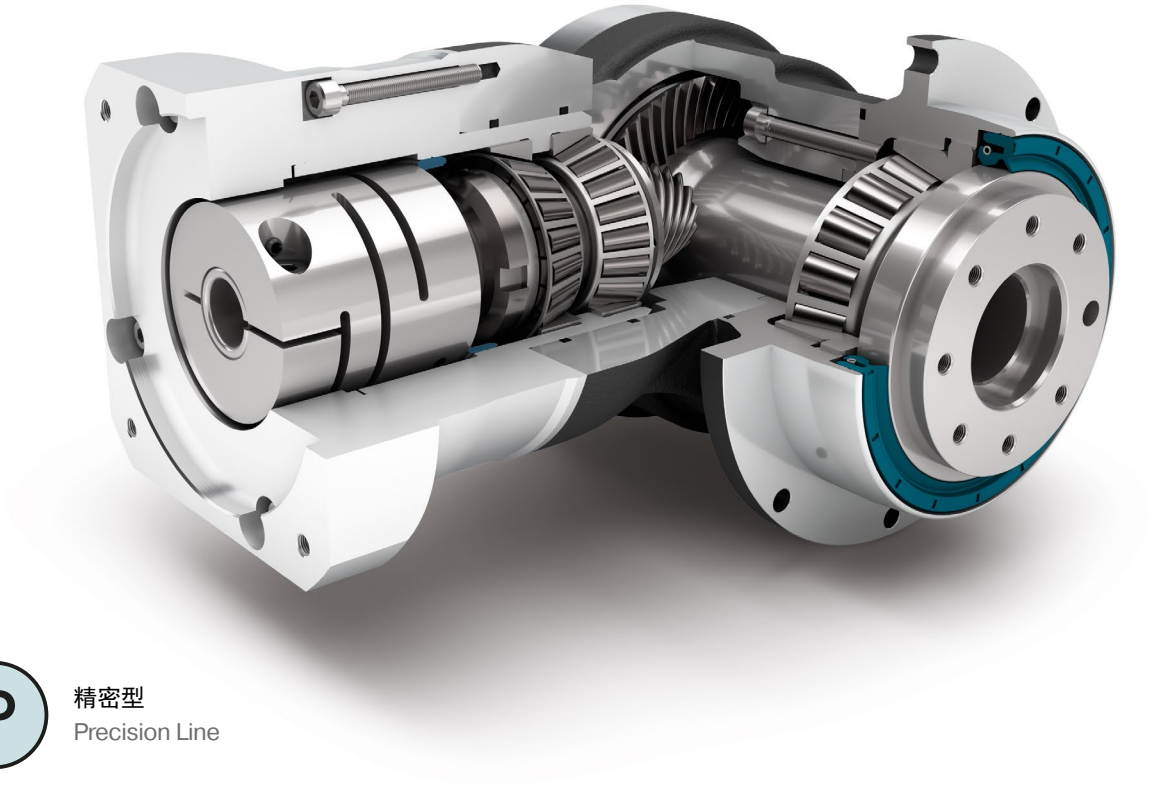

精密型
Precision Line

直角型减速机
Right angle gearbox

旋转方向 反方向
Counterdirectional rotation

准双曲面齿轮 直角箱
Hypoid gear right angle stage

圆形特大号输出法兰
Extra large round type output flange

配有预紧的角接触滚子轴承
Preloaded angular contact roller bearings

径向轴密封
Rotary shaft seal

法兰输出轴（按 ISO 9409 标准）
Flange output shaft (ISO 9409)

空心轴（1级）
Hollow shaft (1-stage)

可选：降低回程间隙（2级）
Option: Reduced backlash (2-stage)

可选：装有小齿轮的高精度减速机 140页
Option: Planetary gearbox with mounted pinion on page 140

技术特点的详细解释，请从第169页读起。
Detailed explanations of the technical features starting on page 169.

Code	减速机参数	Gearbox characteristics			WPSFN064	WPSFN090	WPSFN110	WPSFN140	p[1]
	使用寿命 (L_{10h})	Service life (L_{10h})	t_L	h	20.000				
	T_{2N} x 0,88 时的使用寿命	Service life at T_{2N} x 0,88			30.000				
	满载时效率[2]	Efficiency at full load[2]	η	%	94				1
					93				2
	最低工作温度	Min. operating temperature	T_{min}	°C	-25				
	最高工作温度	Max. operating temperature	T_{max}		90				
	防护等级	Protection class			IP65				
S	标准润滑	Standard lubrication			润滑油(终生润滑) / Oil (lifetime lubrication)				
F	食品级润滑	Food grade lubrication			润滑油(终生润滑) / Oil (lifetime lubrication)				
	安装位置	Installation position			任意 / Any				
S	标准回程间隙	Standard backlash	j_t	arcmin	< 5				
R	降低回程间隙	Reduced backlash			-				1
					< 3				2
	抗扭刚度[2]	Torsional stiffness[2]	c_g	Nm / arcmin	1,9 - 2,6	4,0 - 5,5	10,1 - 13,5	26,0 - 34,5	1
					5,3 - 6,9	15,3 - 20,5	33,5 - 44,0	85,0 - 111,0	2
	减速机重量[2]	Gearbox weight[2]	m_G	kg	3,5 - 3,6	6,6 - 7,0	11,6 - 11,7	25,4 - 26,0	1
					3,9 - 4,0	5,6 - 5,7	9,0 - 9,3	19,2 - 19,7	2
S	标准的箱体表面	Standard surface			直角箱体: 铝 – 阳极氧化处理 (黑色) Right angle housing: Aluminum – anodized (black)				
	运行噪音[3]	Running noise[3]	Q_g	dB(A)	66	67	68	70	
	基于减速机输入法兰的最大弯矩[4]	Max. bending moment based on the gearbox input flange[4]	M_b	Nm	12	25,5	53	120	1
					12	12	25,5	53	2

输出轴载荷	Output shaft loads			WPSFN064	WPSFN090	WPSFN110	WPSFN140	p[1]
20,000 h 的径向力[5][6]	Radial force for 20,000 h[5][6]	$F_{r\,20.000\,h}$	N	2400	4400	5500	12000	1
				2150	3950	4900	12000	2
20,000 h 的轴向力[5][6]	Axial force for 20,000 h[5][6]	$F_{a\,20.000\,h}$		4200	7200	9500	8500	1
				4300	8200	9500	8500	2
30,000 h 的径向力[5][6]	Radial force for 30,000 h[5][6]	$F_{r\,30.000\,h}$		2100	3900	4800	11000	1
				1900	3500	4350	11000	2
30,000 h 的轴向力[5][6]	Axial force for 30,000 h[5][6]	$F_{a\,30.000\,h}$		3700	6300	8400	7500	1
				3800	7200	8400	7500	2
最大径向力[7][6]	Maximum radial force[7][6]	$F_{r\,Stat}$		2400	4400	5500	12000	1
				2150	3950	4900	12000	2
最大轴向力[7][6]	Maximum axial force[7][6]	$F_{a\,Stat}$		4200	7200	9500	8500	1
				4300	8200	9500	8500	2
20,000 h 倾斜力矩[5][7]	Tilting moment for 20,000 h[5][7]	$M_{K\,20.000\,h}$	Nm	200	484	689	1989	1
				132	326	475	1030	2
30,000 h 倾斜力矩[5][7]	Tilting moment for 30,000 h[5][7]	$M_{K\,30.000\,h}$		175	429	601	1823	1
				117	289	422	944	2

转动惯量	Moment of inertia			WPSFN064	WPSFN090	WPSFN110	WPSFN140	p[1]
转动惯量[2]	Mass moment of inertia[2]	J	$kgcm^2$	0,502 - 0,672	1,046 - 1,591	4,857 - 6,435	15,220 - 21,693	1
				0,497 - 0,642	0,497 - 0,659	1,015 - 1,452	4,810 - 6,449	2

WPSFN

(1) 减速机级数
(2) 传动比相关的数值可在 Tec Data Finder 中检索 – www.neugart.com
(3) 距离减速机1 m 时: 在输入转速为 n_1=3000 min^{-1} 且无负荷时测得; i=5
(4) 最大电机重量* (单位 : kg) = 0.2 x M_b / 电机长度 (单位: m)
* 电机重量对称分布
* 水平和固定的安装位置
(5) 数据以 n_2=100 min^{-1} 的输出轴转速为准。
(6) 以输出轴中心为准
(7) 更改 T_{2N}, F_r, F_a 以及周期和轴承使用寿命时, 数值存在偏差(部分较高)。利用 NCP 针对应用进行专门设计 – www.neugart.com

(1) Number of stages
(2) The ratio-dependent values can be retrieved in Tec Data Finder – www.neugart.com
(3) Sound pressure level from 1 m, measured on input running at n_1=3000 rpm no load; i=5
(4) Max. motor weight* in kg = 0.2 x M_b / motor length in m
* with symmetrically distributed motor weight
* with horizontal and stationary mounting
(5) These values are based on an output shaft speed of n_2=100 rpm
(6) Based on the end of the output shaft
(7) Other (sometimes higher) values following changes to T_{2N}, F_r, F_a, cycle, and service life of bearing. Application specific configuration with NCP – www.neugart.com

输出扭矩	**Output torques**			**WPSFN064**	**WPSFN090**	**WPSFN110**	**WPSFN140**	**i(1)**	**p(2)**
额定输出扭矩(3)	Nominal output torque(3)	T_{2N}	Nm	45	90	160	320	4	1
				42	75	140	280	5	
				28	51	91	189	7	
				27	50	90	180	8	
				22	40	75	160	10	
				62	130	310	625	16	2
				62	130	300	560	20	
				60	120	255	540	25	
				62	112	204	364	28	
				62	108	200	360	32	
				60	123	255	455	35	
				60	123	250	450	40	
				60	110	200	375	50	
				37	78	175	355	70	
				28	59	140	305	100	
最大输出扭矩(4)	Max. output torque(4)	T_{2max}	Nm	72	144	256	512	4	1
				67	120	224	448	5	
				45	82	145	302	7	
				43	80	144	288	8	
				35	64	120	256	10	
				99	210	502	1003	16	2
				99	210	480	896	20	
				96	197	408	864	25	
				99	180	328	580	28	
				99	172	320	576	32	
				96	197	410	725	35	
				96	197	400	720	40	
				96	175	320	600	50	
				59	125	280	568	70	
				45	94	224	488	100	

(1) 传动比 ($i=n_1/n_2$)
(2) 减速机级数
(3) 利用 NCP 针对应用进行专门设计 – www.neugart.com
(4) 允许输出轴转动30.000转; 参见第 158 页

(1) Ratios ($i=n_1/n_2$)
(2) Number of stages
(3) Application specific configuration with NCP – www.neugart.com
(4) 30,000 rotations of the output shaft permitted; see page 159

输出扭矩	Output torques			WPSFN064	WPSFN090	WPSFN110	WPSFN140	i[1]	p[2]
急停扭矩[3]	Emergency stop torque[3]	T_{2Stop}	Nm	100	200	400	800	4	1
				100	200	400	800	5	
				75	150	300	700	7	
				75	150	300	700	8	
				75	150	300	700	10	
				150	300	650	1600	16	2
				150	300	650	1600	20	
				150	300	650	1650	25	
				150	300	600	1200	28	
				150	300	600	1200	32	
				150	300	650	1500	35	
				150	300	650	1500	40	
				150	300	650	1500	50	
				80	175	340	1300	70	
				90	200	480	600	100	

输入转速	Input speeds			WPSFN064	WPSFN090	WPSFN110	WPSFN140	i[1]	p[2]
T_{2N} 和 S1 时的平均热输入转速[4][5]	Average thermal input speed at T_{2N} and S1[4][5]	n_{1N}	min^{-1}	1850[6]	1650[6]	1100[6]	1000[6]	4	1
				2050[6]	1900[6]	1200[6]	1100[6]	5	
				2450[6]	2350[6]	1450[6]	1300[6]	7	
				2500[6]	2400[6]	1450[6]	1300[6]	8	
				2650[6]	2550[6]	1500[6]	1400[6]	10	
				2250[6]	2100[6]	1750[6]	1400[6]	16	2
				2400[6]	2300[6]	2000[6]	1350[6]	20	
				2500[6]	2600[6]	2300[6]	1450[6]	25	
				2550[6]	2650[6]	2400[6]	1650[6]	28	
				2550[6]	2700[6]	2450[6]	1650[6]	32	
				2750[6]	2850[6]	2450[6]	1650[6]	35	
				2800[6]	2750[6]	2500[6]	1650[6]	40	
				2750[6]	2900[6]	2650[6]	1750[6]	50	
				3000[6]	3300[6]	3000[6]	1950[6]	70	
				3050[6]	3600[6]	3300[6]	2150[6]	100	
最高机械输入转速[4]	Max. mechanical input speed[4]	n_{1Limit}	min^{-1}	16000	14000	9500	8000		1
				16000	16000	14000	9500		2

(1) 传动比 ($i=n_1/n_2$)
(2) 减速机级数
(3) 允许 1000 次
(4) 利用 NCP 针对应用设计转速 – www.neugart.com
(5) 定义请参见第 158 页
(6) 在 50% T_{2N} 输出和 S1 模式下 的平均热传动转速

(1) Ratios ($i=n_1/n_2$)
(2) Number of stages
(3) Permitted 1000 times
(4) Application-specific speed configurations with NCP – www.neugart.com
(5) See page 159 for the definition
(6) Average thermal input speed at 50% T_{2N} and S1

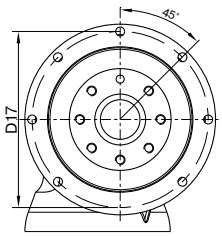

WPSFN064
WPSFN090

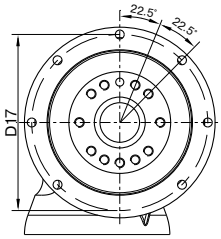

WPSFN110

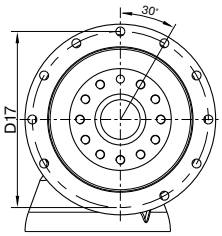

WPSFN140

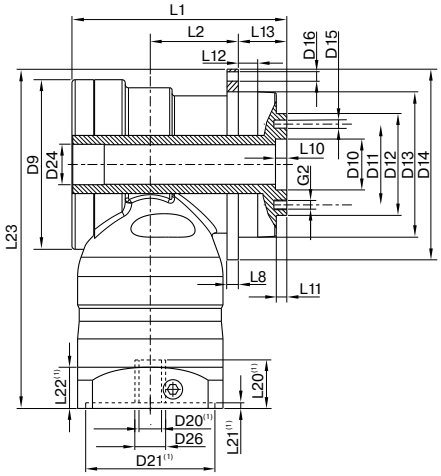

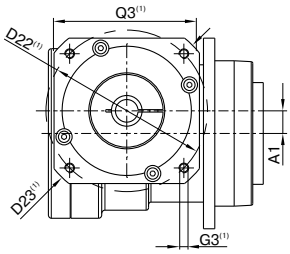

图示为带平键的 WPLN090 / 1 级 / 光滑输出轴 / 19 mm 锁紧系统 / 适配电机法兰 – 2 件式 – 圆形通用法兰 / B5 电机法兰类型
Drawing corresponds to a WPSFN090 / 1-stage / flange hollow output shaft / 19 mm clamping system / motor adaptation – 2-part – round universal flange / B5 flange type motor

(1) 具体尺寸视电机/减速机法兰而定。可以在 www.neugart.com 下 Tec Data Finder。中针对每个电机适配电机特有的输入法兰几何尺寸。
(1) The dimensions vary with the motor/gearbox flange. The input flange dimensions can be retrieved for each specific motor in Tec Data Finder at www.neugart.com

几何尺寸(2)	Geometry(2)			WPSFN064	WPSFN090	WPSFN110	WPSFN140	p(3)	Code
轴向偏差	Axis offset	A1		10	14	20	26	1	
				10	10	14	20	2	
最大直径	Max. diameter	D9		86	105	120	170	1	
				86	86	105	120	2	
输出端定位凹槽直径	Centering diameter output shaft	D10	H7	20	31,5	40	50		
输出端安装孔节圆直径	Pitch circle diameter output shaft	D11		31,5	50	63	80		
输出轴定位凸台直径	Centering diameter output shaft	D12	h7	40	63	80	100		
法兰输出轴的直径	Flange output shaft diameter	D13		64	90	110	140		
输出法兰直径	Flange diameter output	D14		86	118	145	179		
输出端安装孔直径	Mounting bore output	D16		4,5 7x45°	5,5 7x45°	5,5 7x45°	6,6 10x30°	1	
				4,5 8x45°	5,5 8x45°	5,5 8x45°	6,6 12x30°	2	
输出法兰安装孔节圆直径	Pitch circle diameter output flange	D17		79	109	135	168		
最小总长	Min. total length	L1		104,5	132	153,5	201,5	1	
				122,5	139,5	154	224	2	
箱体长度	Housing length	L2		42	53,5	68	76,5	1	
				59,5	66,5	76,5	129,5	2	
输出端法兰厚度	Flange thickness output	L8		4	7	8	10		
偏差距离	Offset length	L9		43	48,5	56,5	87	1	
				43	43	48,5	56,5	2	
输出轴定位凸台深度	Centering depth output shaft	L10		4,5	6,5	6,5	6,5		
		L11		3	6	6	6		
输出法兰定位凸台深度	Centering depth output flange	L12		10	12	12	14		
输出法兰长度	Output flange length	L13		19,5	30,0	29,0	38,0		
最小总高度	Min. overall height	L23		179	210	260	323	1	
				179	195	223,5	277	2	
电机轴直径j6/k6	Motor shaft diameter j6/k6	D20		更多信息见第 155/156 页 More information on page 155/156					
输入端锁紧系统直径	Clamping system diameter input	D26							
带有定位销孔的法兰输出轴 (EN ISO 9409-1)	Flange output hollow shaft with dowel hole (EN ISO 9409-1)							1	H
配合销孔 x 深度	Dowel hole x depth	D15	H7	5x5	6x6	6x6	8x8		
空心轴直径	Hollow shaft diameter	D24		17	25	35	50		
数量 x 螺纹 x 深度	Number x thread x depth	G2		7 x M5x7	7 x M6x10	11 x M6x12	11 x M8x15		
法兰输出轴（相似的 EN ISO 9409-1)	Flange output shaft (similar EN ISO 9409-1)							2	D
数量 x 螺纹 x 深度	Number x thread x depth	G2		8 x M5x7	8 x M6x10	12 x M6x12	12 x M8x15		
带有配合销孔的法兰输出轴 (EN ISO 9409-1)	Flange output shaft with dowel hole (EN ISO 9409-1)			-				2	E
配合销孔 x 深度	Dowel hole x depth	D15	H7	5x5	6x6	6x6	8x8		
数量 x 螺纹 x 深度	Number x thread x depth	G2		7 x M5x7	7 x M6x10	11 x M6x12	11 x M8x15		

(2) 所有的尺寸单位为mm
(3) 减速机级数

(2) Dimensions in mm
(3) Number of stages

WGN

空心轴式输出的准双曲面齿轮减速机——噪音低，以胀紧力传递的方式进行安装

WGN 是一款运行极安静的空心轴输出准双曲面齿轮减速机。同时，准双曲面齿轮可提高应用设备的工件表面的质量。使用一个胀紧套，便可直接将其连接至应用上——简单、安全，提供了新的结构设计型式。

The spiral right angle gearbox with hollow shaft – low noise levels and force-fit installation

Our **WGN** is a hollow-shaft right angle gearbox that operates with particularly low noise levels. At the same time, the spiral teeth increase the quality of your workpiece surfaces. It can be connected directly to the application via a shrink disc, a simple and reliable solution that offers you new design possibilities.

额定扭矩 Nominal output torque	**22 - 320 Nm**
径向力 Radial force	**2700 - 10000 N**
轴向力 Axial force	**4300 - 14500 N**
回程间隙 Torsional backlash	**5 arcmin**
防护等级 Protection class	**IP65**

结构尺寸
Frame sizes

70 **90** **115** **142**

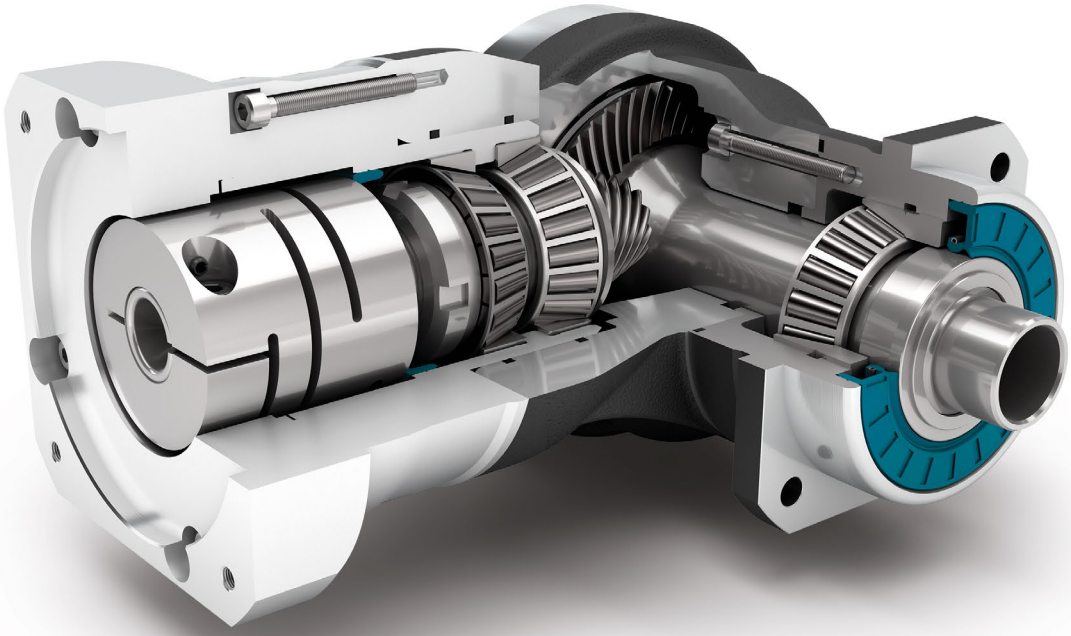

精密型
Precision Line

直角型减速机
Right angle gearbox

旋转方向 反方向
Counterdirectional rotation

准双曲面齿轮 直角箱
Hypoid gear right angle stage

正方形输出法兰
Square type output flange

配有预紧的圆锥滚子轴承
Preloaded tapered roller bearings

径向轴密封
Rotary shaft seal

输出端带有超长定心环
Extra long centering collar

夹紧系统的空心轴，带有胀紧套
Hollow shaft for clamping system with shrink disc

技术特点的详细解释，请从第169页读起。
Detailed explanations of the technical features starting on page 169.

Code	减速机参数	Gearbox characteristics			WGN070	WGN090	WGN115	WGN142	p(1)
	使用寿命 (L_{10h})	Service life (L_{10h})	t_L	h	20000				
	T_{2N} x 0,88 时的使用寿命	Service life at T_{2N} x 0,88			30000				
	满载时效率(2)	Efficiency at full load(2)	η	%	95				
	最低工作温度	Min. operating temperature	T_{min}	°C	-25				
	最高工作温度	Max. operating temperature	T_{max}		90				
	防护等级	Protection class			IP65				
S	标准润滑	Standard lubrication			润滑油(终生润滑) / Oil (lifetime lubrication)				
F	食品级润滑	Food grade lubrication			润滑油(终生润滑) / Oil (lifetime lubrication)				
	安装位置	Installation position			任意 / Any				
S	标准回程间隙	Standard backlash	j_t	arcmin	< 5				
R	降低回程间隙	Reduced backlash			-				
	抗扭刚度(2)	Torsional stiffness(2)	c_g	Nm / arcmin	1,6 - 2,2	4,2 - 5,7	9,2 - 12,4	23,5 - 31,5	
	减速机重量(2)	Gearbox weight(2)	m_G	kg	3,2 - 3,3	5,1 - 5,6	10,9	23,3 - 23,8	
S	标准的箱体表面	Standard surface			直角箱体: 铝 – 阳极氧化处理 (黑色) Right angle housing: Aluminum – anodized (black)				
	运行噪音(3)	Running noise(3)	Q_g	dB(A)	66	67	68	70	
	基于减速机输入法兰的最大弯矩(4)	Max. bending moment based on the gearbox input flange(4)	M_b	Nm	12	25,5	53	120	

输出轴载荷	Output shaft loads			WGN070	WGN090	WGN115	WGN142	p(1)
20,000 h 的径向力(5)(6)	Radial force for 20,000 h(5)(6)	$F_{r\,20.000\,h}$	N	2700	4000	6500	10000	
20,000 h 的轴向力(5)(6)	Axial force for 20,000 h(5)(6)	$F_{a\,20.000\,h}$		4300	5900	7000	14500	
30,000 h 的径向力(5)(6)	Radial force for 30,000 h(5)(6)	$F_{r\,30.000\,h}$		2700	4000	6500	10000	
30,000 h 的轴向力(5)(6)	Axial force for 30,000 h(5)(6)	$F_{a\,30.000\,h}$		3700	5200	6100	12000	
最大径向力(6)(7)	Maximum radial force(6)(7)	$F_{r\,Stat}$		2700	4000	6500	10000	
最大轴向力(6)(7)	Maximum axial force(6)(7)	$F_{a\,Stat}$		4300	5900	7000	14500	
20,000 h 倾斜力矩(5)(7)	Tilting moment for 20,000 h(5)(7)	$M_{K\,20.000\,h}$	Nm	252	442	970	1505	
30,000 h 倾斜力矩(5)(7)	Tilting moment for 30,000 h(5)(7)	$M_{K\,30.000\,h}$		252	442	970	1505	

转动惯量	Moment of inertia			WGN070	WGN090	WGN115	WGN142	p(1)
转动惯量(2)	Mass moment of inertia(2)	J	$kgcm^2$	0,502 - 0,834	1,018 - 1,417	4,805 - 6,111	12,934 - 18,905	

(1) 减速机级数
(2) 传动比相关的数值可在 Tec Data Finder 中检索 – www.neugart.com
(3) 距离减速机1 m 时; 在输入转速为 n_1=3000 min^{-1} 且无负荷时测得; i=5
(4) 最大电机重量* (单位 : kg) = 0.2 x M_b / 电机长度 (单位: m)
* 电机重量对称分布
* 水平和固定的安装位置
(5) 数据以 n_2=100 min^{-1} 的输出轴转速为准。
(6) 以输出轴中心为准
(7) 更改 T_{2N}, F_r, F_a 以及周期和轴承使用寿命时, 数值存在偏差(部分较高)。利用 NCP 针对应用进行专门设计 – www.neugart.com

(1) Number of stages
(2) The ratio-dependent values can be retrieved in Tec Data Finder – www.neugart.com
(3) Sound pressure level from 1 m, measured on input running at n_1=3000 rpm no load; i=5
(4) Max. motor weight* in kg = 0.2 x M_b / motor length in m
* with symmetrically distributed motor weight
* with horizontal and stationary mounting
(5) These values are based on an output shaft speed of n_2=100 rpm
(6) Based on center of output shaft
(7) Other (sometimes higher) values following changes to T_{2N}, F_r, F_a, cycle, and service life of bearing. Application specific configuration with NCP – www.neugart.com

输出扭矩	Output torques			WGN070	WGN090	WGN115	WGN142	i(1)	p(2)
额定输出扭矩(3)	Nominal output torque(3)	T_{2N}	Nm	45	70	140	320	4	1
				42	70	140	280	5	
				28	51	91	189	7	
				27	50	90	180	8	
				22	40	75	160	10	
最大输出扭矩(4)	Max. output torque(4)	T_{2max}	Nm	72	112	224	512	4	
				67	112	224	448	5	
				45	82	145	302	7	
				43	80	144	288	8	
				35	64	120	256	10	
急停扭矩(5)	Emergency stop torque(5)	T_{2Stop}	Nm	100	200	400	800	4	
				100	200	400	800	5	
				75	150	300	700	7	
				75	150	300	700	8	
				75	150	300	700	10	

输入转速	Input speeds			WGN070	WGN090	WGN115	WGN142	i(1)	p(2)
T_{2N} 和 S1 时的平均热输入转速(4)(5)	Average thermal input speed at T_{2N} and S1(4)(5)	n_{1N}	min^{-1}	1750(6)	1700(6)	1150(6)	950(6)	4	1
				1900(6)	1850(6)	1200(6)	1000(6)	5	
				2250(6)	2200(6)	1400(6)	1200(6)	7	
				2300(6)	2200(6)	1400(6)	1200(6)	8	
				2400(6)	2350(6)	1500(6)	1300(6)	10	
最高机械输入转速(4)	Max. mechanical input speed(4)	n_{1Limit}	min^{-1}	16000	14000	9500	8000		

(1) 传动比 ($i=n_1/n_2$)
(2) 减速机级数
(3) 利用 NCP 针对应用进行专门设计 – www.neugart.com
(4) 允许输出轴转动30.000转; 参见第 158 页
(5) 允许 1000 次
(6) 利用 NCP 针对应用设计转速 – www.neugart.com
(7) 定义请参见第 158 页
(8) 在 50% T_{2N} 输出和 S1 模式下 的平均热传动转速

(1) Ratios ($i=n_1/n_2$)
(2) Number of stages
(3) Application specific configuration with NCP – www.neugart.com
(4) 30,000 rotations of the output shaft permitted; see page 159
(5) Permitted 1000 times
(6) Application-specific speed configurations with NCP – www.neugart.com
(7) See page 159 for the definition
(8) Average thermal input speed at 50% T_{2N} and S1

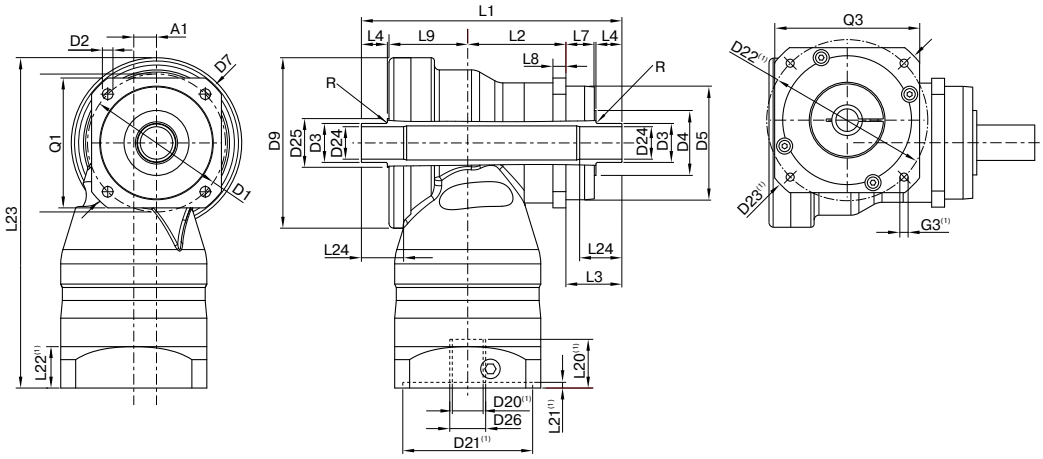

图示为带平键的 WGN090 / 1 级 / 双侧空心输出轴 / 19 mm 锁紧系统 / 适配电机法兰 – 2 件式 – 圆形通用法兰 / B5 电机法兰类型
Drawing corresponds to a WGN090 / 1-stage / hollow output shaft on both sides / 19 mm clamping system / motor adaptation – 2-part – round universal flange / B5 flange type motor

(1) 具体尺寸视电机/减速机法兰而定。可以在 www.neugart.com 下 Tec Data Finder，中针对每个电机适配电机特有的输入法兰几何尺寸。
(1) The dimensions vary with the motor/gearbox flange. The input flange dimensions can be retrieved for each specific motor in Tec Data Finder at www.neugart.com

几何尺寸(2)	Geometry(2)			WGN070	WGN090	WGN115	WGN142	p(3)	Code
轴向偏差	Axis offset	A1		10	14	20	26	1	
输出端安装孔节圆直径	Pitch circle diameter output	D1		68 - 75	85	120	165		
输出端安装孔直径	Mounting bore output	D2	4x	5,5	6,5	9,0	11,0		
输出轴直径	Shaft diameter output	D3	h8	18	24	36	50		
输出轴轴肩直径	Shaft collar output	D4		30	34	45	70		
输出端定位凸台直径	Centering diameter output	D5	g7	60	70	90	130		
输出法兰对角线尺寸	Diagonal dimension output	D7		92	100	140	185		
最大直径	Max. diameter	D9		86	105	120	170		
输出端法兰外方	Flange cross section output	Q1	■	70	80	110	142		
箱体长度	Housing length	L2		46,5	60,5	73,5	76		
输出轴轴长	Shaft length output	L3		33	34,5	48	54		
输出端定位凸台深度	Centering depth output	L7		18	17,5	27	28		
输出端法兰厚度	Flange thickness output	L8		7	8	10	12		
偏差距离	Offset length	L9		43	48,5	56,5	87		
最小总高度	Min. overall height	L23		179	203,5	247,5	318		
最大半径	Max. radius	R		1,5					
电机轴直径j6/k6	Motor shaft diameter j6/k6	D20		更多信息见第 155/156 页 More information on page 155/156					
输入端锁紧系统直径	Clamping system diameter input	D26							
单侧空心输出轴	Hollow output shaft on one side								F
空心轴直径	Hollow shaft diameter	D24	H6	15	20	30	40		
总长	Total length	L1		122,5	143,5	178	217		
到轴肩的距离	Shaft length from shoulder	L4		14	16	20	25		
最小配合长度	Min. fit length	L24		20	25	30	35		
双侧空心输出轴	Hollow output shaft on both sides								G
空心轴直径	Hollow shaft diameter	D24	H6	15	20	30	40		
轴肩	Shaft collar	D25		25	30	42	55		
总长	Total length	L1		137,5	160,5	199	243		
到轴肩的距离	Shaft length from shoulder	L4		14	16	20	25		
最小配合长度	Min. fit length	L24		20	25	30	35		

(2) 所有的尺寸单位为mm
(3) 减速机级数

(2) Dimensions in mm
(3) Number of stages

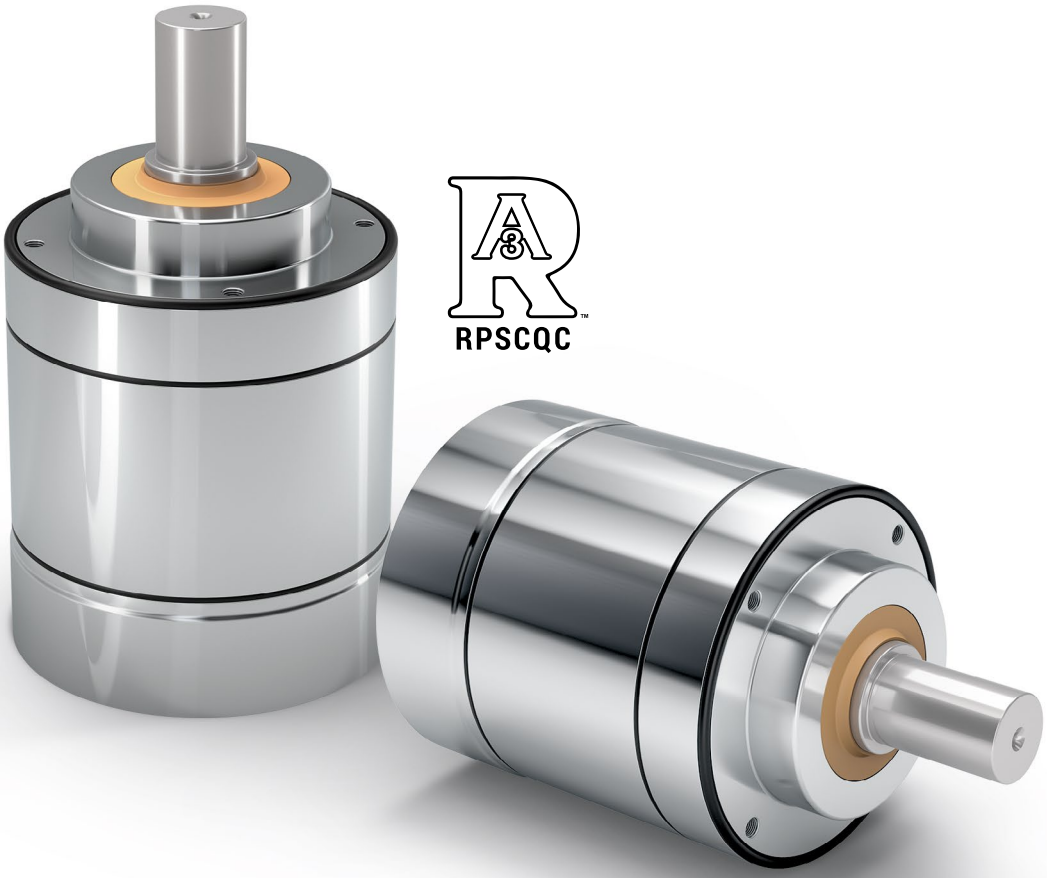

RPSCQC

HLAE

独一无二的行星减速机 采用经过认证的卫生设计 – 安全清洁流程的理想之选

HLAE 具有独一无二的优势：它是世界首款采用经过认证的卫生设计的行星减速机——减速机外表无螺栓 ，因此灵活多变；性能出众；便于清洁。专为敏感领域，如医药、化妆品和食品行业应用而研发。

The unique planetary gearbox with certified hygienic design – ideal for reliable cleaning processes

Our **HLAE** is unique: It is the world's first planetary gearbox with certified hygienic design – flexible without a radial screw, powerful, and yet ideal for fast and easy cleaning. It has been developed specifically for challenging applications such as in the pharmaceutical, cosmetics and food industries.

额定扭矩 Nominal output torque	**15 - 171 Nm**
径向力 Radial force	**450 - 1450 N**
轴向力 Axial force	**550 - 2500 N**
回程间隙 Torsional backlash	**7 - 12 arcmin**
防护等级 Protection class	**IP69K**

结构尺寸
Frame sizes

70 **90** **110**

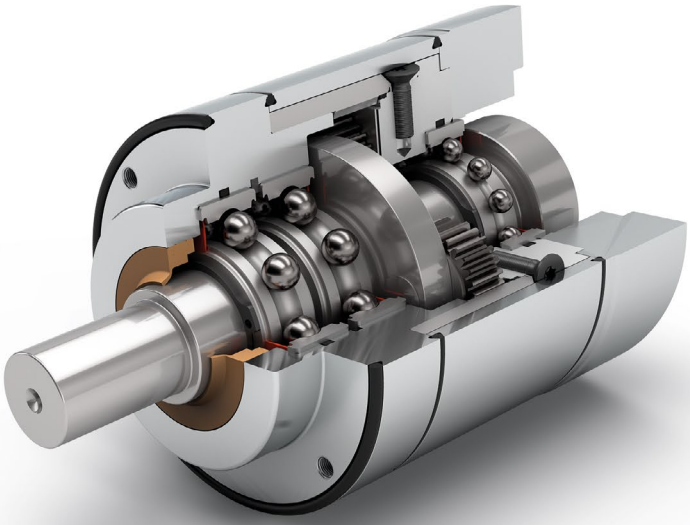

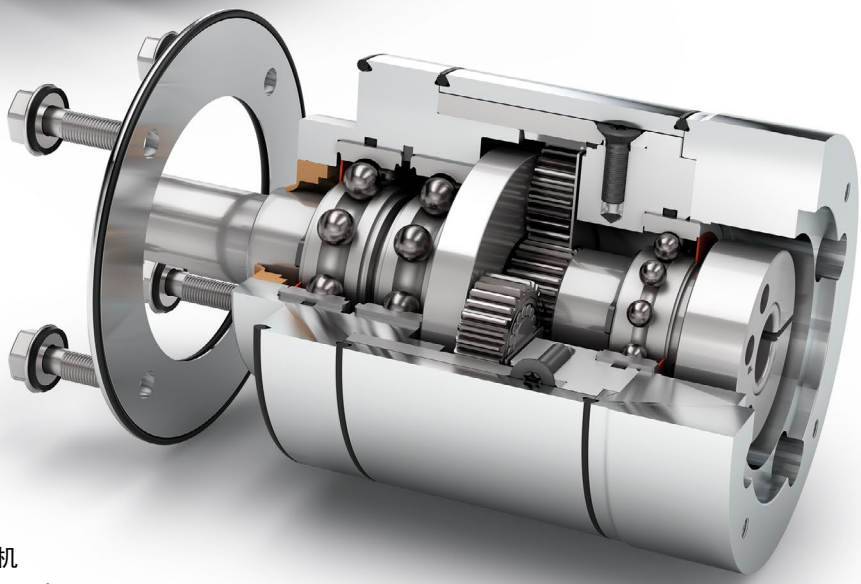

A 针对特定应用的减速机
Application-specific gearbox

同轴减速机
Coaxial gearbox

旋转方向 同方向
Equidirectional rotation

直齿
Spur gear

圆形输出法兰
Round type output flange

低摩擦深沟球轴承
Low-friction deep groove ball bearings

径向轴密封
Rotary shaft seal

行星齿轮架
Planet carrier in disc design

FFKM 可选：FFKM 密封件
Option: FFKM seal

技术特点的详细解释，请从第169页读起。
Detailed explanations of the technical features starting on page 169.

Code	减速机参数	Gearbox characteristics			HLAE070	HLAE090	HLAE110	p[1]
	使用寿命 (L_{10h})	Service life (L_{10h})	t_L	h	30.000			
	满载时效率[2]	Efficiency at full load[2]	η	%	98			1
					97			2
	最低工作温度	Min. operating temperature	T_{min}	°C	-25			
	最高工作温度	Max. operating temperature	T_{max}		90			
	防护等级	Protection class			IP69K			
F	食品级润滑	Food grade lubrication			润滑脂(终生润滑) / Grease (lifetime lubrication)			
	安装位置	Installation position			任意 / Any			
S	标准回程间隙	Standard backlash	j_t	arcmin	< 10	< 7	< 7	1
					< 12	< 9	< 9	2
	抗扭刚度[2]	Torsional stiffness[2]	c_g	Nm / arcmin	2,3 - 3,1	6,6 - 8,7	14,7 - 19,5	1
					2,2 - 3,2	6,6 - 9,0	13,5 - 20,5	2
	减速机重量[2]	Gearbox weight[2]	m_G	kg	2,1	3,8	7,3 - 7,4	1
					2,4 - 2,5	4,3 - 4,5	8,7 - 9,0	2
S	标准的箱体表面	Standard surface			箱体: 不锈钢 1.4404 – 电解抛光 (R_a < 0,8 µm) Housing: Stainless steel 1.4404 – electropolished (R_a < 0,8 µm)			
	运行噪音[3]	Running noise[3]	Q_g	dB(A)	58	60	65	
	基于减速机输入法兰的最大弯矩[4]	Max. bending moment based on the gearbox input flange[4]	M_b	Nm	8	16	40	

输出轴载荷	Output shaft loads			HLAE070	HLAE090	HLAE110	p[1]
20,000 h 的径向力[5][6]	Radial force for 20,000 h[5][6]	$F_{r\,20.000\,h}$	N	450	900	1450	
20,000 h 的轴向力[5][6]	Axial force for 20,000 h[5][6]	$F_{a\,20.000\,h}$		550	1500	2500	
30,000 h 的径向力[5][6]	Radial force for 30,000 h[5][6]	$F_{r\,30.000\,h}$		400	600	1250	
30,000 h 的轴向力[5][6]	Axial force for 30,000 h[5][6]	$F_{a\,30.000\,h}$		500	1000	2000	
最大径向力[6][7]	Maximum radial force[6][7]	$F_{r\,Stat}$		1000	1250	5000	
最大轴向力[6][7]	Maximum axial force[6][7]	$F_{a\,Stat}$		1200	1600	3800	
20,000 h 倾斜力矩[5][7]	Tilting moment for 20,000 h[5][7]	$M_{K\,20.000\,h}$	Nm	22	49	109	
30,000 h 倾斜力矩[5][7]	Tilting moment for 30,000 h[5][7]	$M_{K\,30.000\,h}$		19	33	94	

转动惯量	Moment of inertia			HLAE070	HLAE090	HLAE110	p[1]
转动惯量[2]	Mass moment of inertia[2]	J	$kgcm^2$	0,065 - 0,135	0,753 - 0,866	1,579 - 2,630	1
				0,064 - 0,131	0,740 - 0,983	1,569 - 2,620	2

(1) 减速机级数
(2) 传动比相关的数值可在 Tec Data Finder 中检索 – www.neugart.com
(3) 距离减速机1 m 时; 在输入转速为 n_1=3000 min^{-1} 且无负荷时测得; i=5
(4) 最大电机重量* (单位 : kg) = 0.2 x M_b / 电机长度 (单位: m)
* 电机重量对称分布
* 水平和固定的安装位置
(5) 数据以 n_2=100 min^{-1} 的输出轴转速为准。
(6) 以输出轴中心为准
(7) 更改 T_{2N}, F_r, F_a 以及周期和轴承使用寿命时, 数值存在偏差(部分较高)。利用 NCP 针对应用进行专门设计 – www.neugart.com

(1) Number of stages
(2) The ratio-dependent values can be retrieved in Tec Data Finder – www.neugart.com
(3) Sound pressure level from 1 m, measured on input running at n_1=3000 rpm no load; i=5
(4) Max. motor weight* in kg = 0.2 x M_b / motor length in m
* with symmetrically distributed motor weight
* with horizontal and stationary mounting
(5) These values are based on an output shaft speed of n_2=100 rpm
(6) Based on center of output shaft
(7) Other (sometimes higher) values following changes to T_{2N}, F_r, F_a, cycle, and service life of bearing. Application specific configuration with NCP – www.neugart.com

输出扭矩	Output torques			HLAE070	HLAE090	HLAE110	i(1)	p(2)
额定输出扭矩(3)(4)	Nominal output torque(3)(4)	T_{2N}	Nm	28	85	115	3	1
				33	87	155	4	
				30	82	171	5	
				25	65	135	7	
				18	50	120	8	
				15	38	95	10	
				33	87	157	9	2
				33	80	171	12	
				33	82	171	15	
				33	87	171	16	
				33	87	171	20	
				30	82	171	25	
				33	87	171	32	
				30	82	171	40	
				18	50	120	64	
				15	38	95	100	
最大输出扭矩(4)(5)	Max. output torque(4)(5)	T_{2max}	Nm	45	136	184	3	1
				53	140	248	4	
				48	131	274	5	
				40	104	216	7	
				29	80	192	8	
				24	61	152	10	
				53	140	251	9	2
				53	140	274	12	
				53	131	274	15	
				53	140	274	16	
				53	140	274	20	
				48	131	274	25	
				53	140	274	32	
				48	131	274	40	
				29	80	192	64	
				24	61	152	100	

(1) 传动比 ($i=n_1/n_2$)
(2) 减速机级数
(3) 利用 NCP 针对应用进行专门设计 – www.neugart.com
(4) 平键 (代码 "A")时的数值: 针对交变载荷
(5) 允许输出轴转动30.000转; 参见第 158 页

(1) Ratios ($i=n_1/n_2$)
(2) Number of stages
(3) Application specific configuration with NCP – www.neugart.com
(4) Values for feather key (code "A"): for repeated load
(5) 30,000 rotations of the output shaft permitted; see page 159

输出扭矩	Output torques			HLAE070	HLAE090	HLAE110	i[1]	p[2]
急停扭矩[3]	Emergency stop torque[3]	T_{2Stop}	Nm	56	170	230	3	1
				66	174	310	4	
				60	164	342	5	
				50	130	270	7	
				36	100	240	8	
				30	76	190	10	
				66	174	314	9	2
				66	174	342	12	
				66	164	342	15	
				66	174	342	16	
				66	174	342	20	
				60	164	342	25	
				66	174	342	32	
				60	164	342	40	
				36	100	240	64	
				30	76	190	100	

输入转速	Input speeds			HLAE070	HLAE090	HLAE110	i[1]	p[2]
T_{2N} 和 S1 时的平均热输入转速[4][5]	Average thermal input speed at T_{2N} and S1[4][5]	n_{1N}	min^{-1}	4000[6]	3500[6]	2800[6]	3	1
				4000[6]	3500[6]	2850[6]	4	
				4000	3500[6]	3000[6]	5	
				4000	3500	3000	7	
				4000	3500	3000	8	
				4000	3500	3000	10	
				4000[6]	3500[6]	3000[6]	9	2
				4000	3500	3000[6]	12	
				4000	3500	3000	15	
				4000	3500	3000	16	
				4000	3500	3000	20	
				4000	3500	3000	25	
				4000	3500	3000	32	
				4000	3500	3000	40	
				4000	3500	3000	64	
				4000	3500	3000	100	
最高机械输入转速[4]	Max. mechanical input speed[4]	n_{1Limit}	min^{-1}	13000	7000	6500		1
				13000	7000	6500		2

(1) 传动比 ($i=n_1/n_2$)
(2) 减速机级数
(3) 允许 1000 次
(4) 利用 NCP 针对应用设计转速 – www.neugart.com
(5) 定义请参见第 158 页
(6) 在 50% T_{2N} 输出和 S1 模式下 的平均热传动转速

(1) Ratios ($i=n_1/n_2$)
(2) Number of stages
(3) Permitted 1000 times
(4) Application-specific speed configurations with NCP – www.neugart.com
(5) See page 159 for the definition
(6) Average thermal input speed at 50% T_{2N} and S1

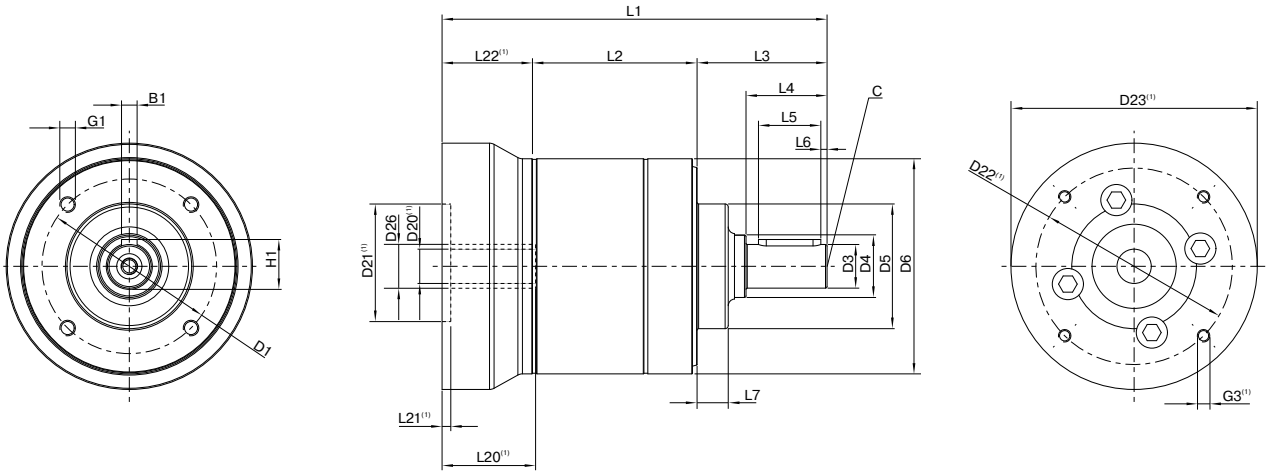

图示为带平键的 HLAE070 / 1 级 / 附带平键的输出轴 / 11 mm 锁紧系统 / 适配电机法兰 - 单一法兰 / B5 电机法兰类型
Drawing corresponds to a HLAE070 / 1-stage / output shaft with feather key / 11 mm clamping system / motor adaptation – one part / B5 flange type motor

(1) 具体尺寸视电机/减速机法兰而定。可以在 www.neugart.com 下 Tec Data Finder，中针对每个电机适配电机特有的输入法兰几何尺寸。
(1) The dimensions vary with the motor/gearbox flange. The input flange dimensions can be retrieved for each specific motor in Tec Data Finder at www.neugart.com

几何尺寸(2)	Geometry(2)			HLAE070	HLAE090	HLAE110	p(3)	Code
输出端安装孔节圆直径	Pitch circle diameter output	D1		56	75	90		
输出轴直径	Shaft diameter output	D3	h7	14	20	25		
输出轴轴肩直径	Shaft collar output	D4		20	25	35		
输出端定位凸台直径	Centering diameter output	D5	h7	40	58	65		
箱体直径	Housing diameter	D6		69	88	109		
安装螺纹 x 深度	Mounting thread x depth	G1	4x	M5x11	M6x12	M8x20		
最小总长	Min. total length	L1		123,5	146	191	1	
				135,5	166	219	2	
箱体长度	Housing length	L2		53,0	68,0	89,0	1	
				65,0	88,0	117,0	2	
输出轴轴长	Shaft length output	L3		41,7	50	66,5		
输出端定位凸台深度	Centering depth output	L7		10	13	14		
电机轴直径j6/k6	Motor shaft diameter j6/k6	D20		更多信息见第 155/156 页 More information on page 155/156				
输入端锁紧系统直径	Clamping system diameter input	D26						
带平键的输出轴（DIN 6885-1）	Output shaft with feather key (DIN 6885-1)			A 5x5x20	A 6x6x25	A 8x7x35		A
平键宽度（DIN 6885-1）	Feather key width (DIN 6885-1)	B1		5	6	8		
含平键在内的轴高（DIN 6885-1）	Shaft height including feather key (DIN 6885-1)	H1		16	22,5	28		
到轴肩的距离	Shaft length from shoulder	L4		26	32	45		
平键长度	Feather key length	L5		20	25	35		
到轴端的距离	Distance from shaft end	L6		2	2,5	5		
中心孔 (DIN 332 DR 形	Center hole (DIN 332, type DR)	C		M5x12,5	M6x16	M10x22		
光滑输出轴	Smooth output shaft							B
到轴肩的距离	Shaft length from shoulder	L4		26	32	45		

(2) 所有的尺寸单位为mm
(3) 减速机级数

(2) Dimensions in mm
(3) Number of stages

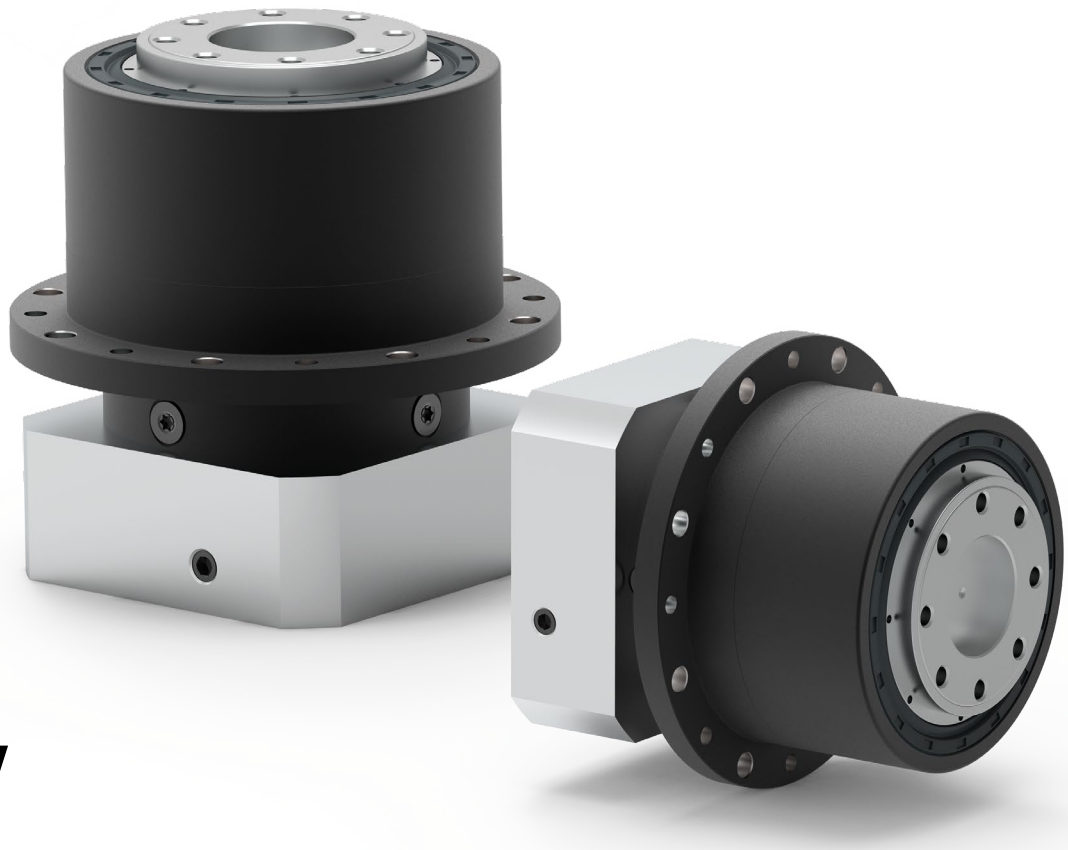

NGV

用于工业地面运输车的行星减速机。结构紧凑，承载能力强

AGV（自动导引车）对驱动技术提出了特殊的要求。这些要求主要有：承受较高的径向负荷，节省空间的设计，可以全天不间断运行，且节约能源。我们的 **NGV** 行星减速机采用特殊的输出轴承设计理念，而且可以直接安装在车辆底盘上，因此能够精确地满足这些要求。

The planetary gearbox for industrial fork lift trucks. Compact and extremely resilient.

AGVs have special requirements when it comes to drive technology. These include high radial loads, space-saving design, 24/7 use and energy efficiency. With its special output bearing concept and the option of direct mounting to the vehicle chassis, our **NGV** planetary gearbox precisely meets these requirements.

额定扭矩
Nominal output torque **18 - 260 Nm**

径向力
Radial force **2300 - 5150 N**

轴向力
Axial force **2850 - 6450 N**

回程间隙
Torsional backlash **9 - 12 arcmin**

防护等级
Protection class **IP65**

动态载荷视减速机型号而定
Dynamic load capacity per gearbox

最大动态载荷	**Max. dynamic load capacity**	kg
减速机包括配轮 NGV064 Ø 160 mm	NGV064 incl. wheel Ø 160 mm	350
减速机包括配轮 NGV090 Ø 200 mm	NGV090 incl. wheel Ø 200 mm	675
减速机包括配轮 NGV110 Ø 250 mm	NGV110 incl. wheel Ø 250 mm	1075

结构尺寸
Frame sizes

64 **90** **110**

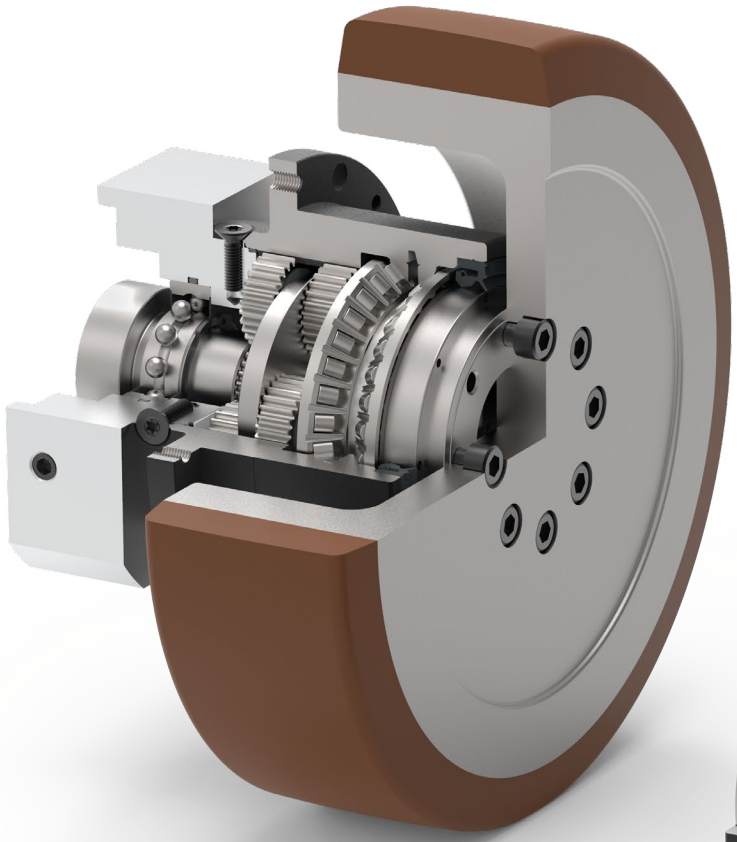

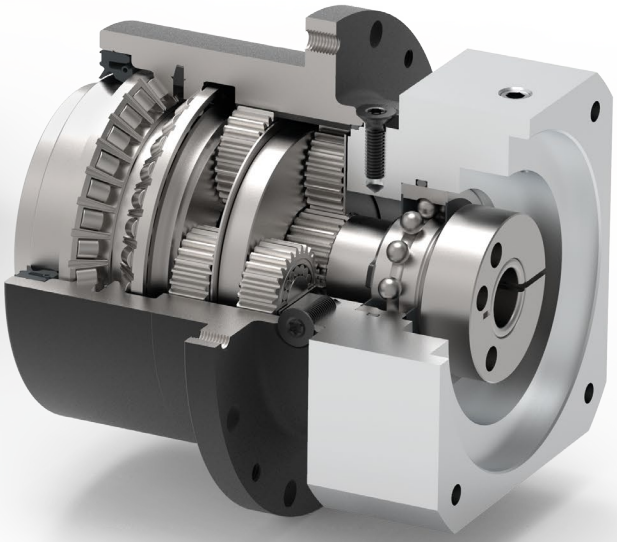

针对特定应用的减速机
Application-specific gearbox

径向轴密封
Rotary shaft seal

直齿
Spur gear

输出端带有超长定心环
Extra long centering collar

圆形特大号输出法兰
Extra large round type output flange

法兰输出轴（按 ISO 9409 标准）
Flange output shaft (ISO 9409)

配有预紧的角接触滚子轴承
Preloaded angular contact roller bearings

行星齿轮架
Planet carrier in disc design

技术特点的详细解释，请从第169页读起。
Detailed explanations of the technical features starting on page 169.

NGV:
完美的AGV减速机

NGV: The perfect gearbox for AGVs.

+ 直接安装

使用安装接口，可以把减速机直接安装在车辆上。不需要另外的适配器。

+ Direct mounting

The mounting interface allows direct mounting of the gearbox to the vehicle. No additional adapters are required.

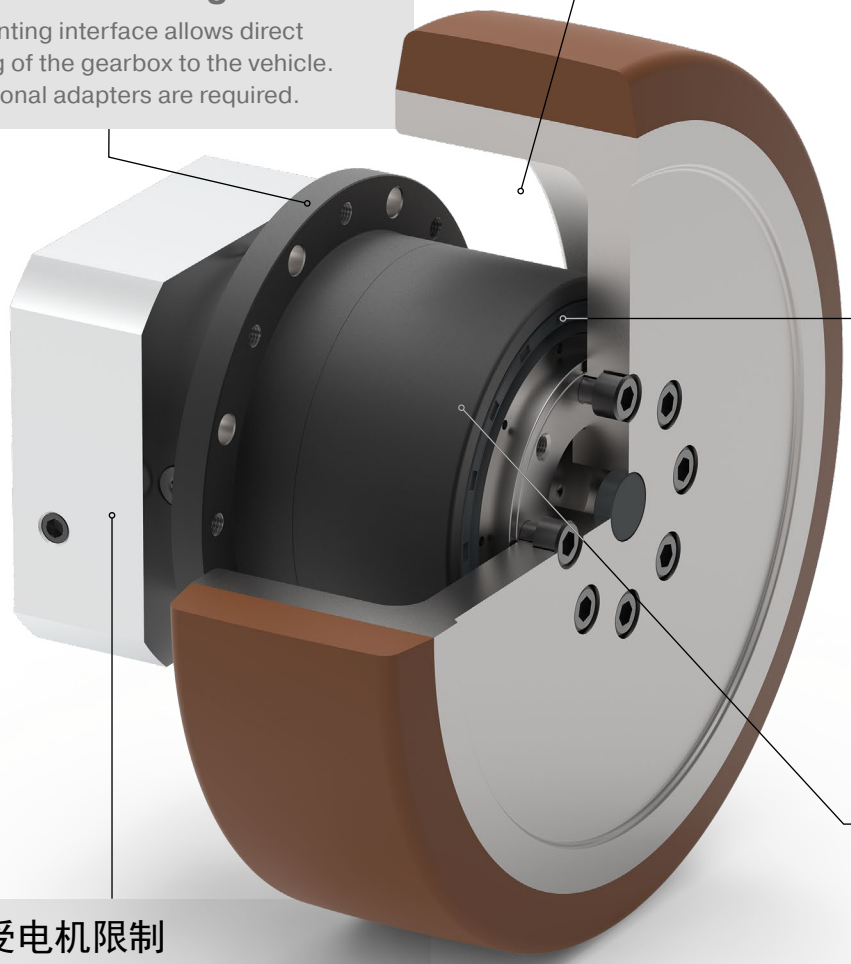

+ 减少安装空间

减速机几乎完全被配轮包围住。因此，车辆内部所需的安装空间被降至最小。

+ Reduction of installation space

The gearbox is almost completely enclosed by the wheel. The required installation space in the vehicle is therefore reduced to a minimum.

+ 承载能力高

预胀紧的两个角接触滚子轴承可以承受较高的径向力。

+ High load capacity

The preloaded, double-designed angular contact roller bearings permit very high radial forces.

+ 高效率，可信赖

实践证明，Neugart 经济 系列的各类减速机都具有较高的效率。它们可以永久润滑，因此不需要维护，在连续运行的情况下仍然极其可靠。

+ High efficiency and reliability

The proven gearbox type from the Neugart Economy series is characterized by a high efficiency. Thanks to its lifetime lubrication, it is also maintenance-free and extremely reliable, even in continuous operation.

+ 不受电机限制

搭配各种不同的电机适配器，
几乎可以组装在任何型号的电机上，
甚至可以直接安装在电机上。

+ Motor independent

By using different motor adapters it is possible to mount almost any motor. Direct mounting of the motor is also possible.

为客户专门定制的 AGV 减速机解决方案。

Neugart 具备扎实的工程与制造方面的专业知识和技能，能够为您研发与定制减速机，是您实力强劲的合作伙伴，同样适合您的车辆

Customer-specific AGV gearbox solutions.

Because ot the comprehensive engineering and manufacturing know-how, Neugart is your competent partner for the development and manufacture of customized gearboxes. Also for your vehicle.

定制减速机研发示例。

Example of a custom gearbox development.

NGV（带配轮的减速机） NGV gearbox incl. wheel

性能(减速机包括配轮)	Characteristics (gearbox incl. wheel)			NGV064	NGV090	NGV110
最大动态载荷[1]	Maximum dynamic load capacity[1]		kg	350	675	1075
最大速度	Max. speed	v	m/s	2		
定位精度	Positioning precision		mm	0,3	0,4	0,4
总重量	Total weight		kg	3,9	7,7	16,4

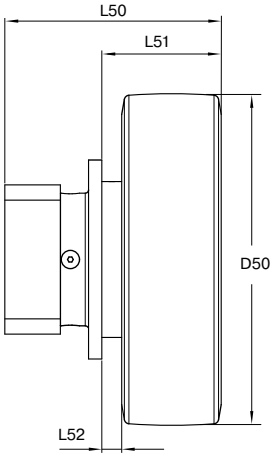

几何尺寸	Geometry			NGV064	NGV090	NGV110
配轮直径	Wheel diameter	D50	mm	160	200	250
最小总长	Min. total length	L50		98,5	130,5	158,0
法兰到配轮外边缘的距离	Distance between flange and outer edge	L51		58,0	72,0	94,0
法兰到配轮内边缘的距离	Distance between flange and inner edge	L52		8,0	12,0	14,0

NGV（减速机） NGV gearbox

Code	减速机参数	Gearbox characteristics			NGV064	NGV090	NGV110
	传动比	Ratios	i		9; 12; 15; 16; 20; 25; 32; 40; 64		
	使用寿命 (L_{10h})	Service life (L_{10h})	t_L	h	30.000		
	满载时效率[2]	Efficiency at full load[2]	η	%	⩾95		
	最低工作温度	Min. operating temperature	T_{min}	°C	-25		
	最高工作温度	Max. operating temperature	T_{max}		90		
	防护等级	Protection class			IP65（从动轮上）/ IP65 (at the output side)		
S	防护等级	Standard lubrication			润滑脂（终生润滑）/ Grease (lifetime lubrication)		
F	食品级润滑	Food grade lubrication			润滑脂（终生润滑）/ Grease (lifetime lubrication)		
L	低温润滑[3]	Low temperature lubrication[3]			润滑脂（终生润滑）/ Grease (lifetime lubrication)		
	安装位置	Installation position			任意 / any		
S	标准回程间隙	Standard backlash	j_t	arcmin	⩽12	⩽9	⩽9
	抗扭刚度[2]	Torsional stiffness[2]	c_g	Nm / arcmin	7,3 - 11,5	19,5 - 38,5	52 - 95
	减速机重量[2]	Gearbox weight[2]	m_G	kg	1,6 - 1,7	4,0	8,5 - 8,7
S	标准的箱体表面	Standard surface			箱体:钢 – 热处理后氧化（黑色 / Housing: Steel – heat-treated and post-oxidized (black)		
	运行噪音[4]	Running noise[4]	Q_g	dB(A)	60	62	65
	基于减速机输入法兰的最大弯矩[5]	Max. bending moment based on the gearbox input flange[5]	M_b	Nm	8	16	40

(1) 带有配轮的 NGV 减速机的最大载荷。载荷为动态载荷，采用额定转矩 T_{2N}。必须使用 NCP，针对特定的应用进行设计。F_a=0
(2) 传动比相关的数值可在 Tec Data Finder 中检索 www.neugart.com
(3) T_{min} = -40°C. 理想运行温度最高为 50°C
(4) 距离减速机1 m 时；在输入转速为 n1=3000 min-1 且无负荷时测得；i=25
(5) M最大电机重量* (单位：kg) = 0.2 x Mb /电机长度（单位：m）
* 电机重量对称分布
* 水平和固定的安装位置

(1) Max. load capacity of NGV gearbox with NGV wheel and dynamic load with nominal torque T_{2N}. Application-specific design with NCP required. With F_a=0
(2) The ratio-dependent values can be retrieved in Tec Data Finder – www.neugart.com
(3) T_{min} = -40°C. Optimal operating temperature max. 50°C
(4) Sound pressure level from 1 m, measured on input running at n_1=3000 rpm no load; i=25
(5) Max. motor weight* in kg = 0.2 x M_b / motor length in m
* with symmetrically distributed motor weight
* with horizontal and stationary mounting

NGV（减速机） NGV gearbox

输出扭矩	Output torques			NGV064	NGV090	NGV110	i[1]
额定输出扭矩[2]	Nominal output torque[2]	T_{2N}	Nm	44	130	210	9
				44	120	260	12
				44	110	230	15
				44	120	260	16
				44	120	260	20
				40	110	230	25
				44	120	260	32
				40	110	230	40
				18	50	120	64
最大输出扭矩[2]	Max. output torque[2]	T_{2max}	Nm	70	208	384	9
				70	192	416	12
				70	176	368	15
				70	192	416	16
				70	192	416	20
				64	176	368	25
				70	192	416	32
				64	176	368	40
				29	80	192	64

输出扭矩	Output torques			NGV064	NGV090	NGV110
急停扭矩[3][4]	Emergency stop torque[3][4]	T_{2Stop}	Nm	80 - 88	190 - 260	380 - 500

输入转速	Input speeds			NGV064	NGV090	NGV110
T_{2N} 和 S1 时的平均热输入转速[2]	Average thermal input speed at T_{2N} and S1[2]	n_{1N}	min^{-1}	4500	4000	3300 - 3500
最高机械输入转速[2]	Max. mechanical input speed[2]	n_{1Limit}		7500	7000	6500

输出轴载荷	Output shaft loads			NGV064	NGV090	NGV110
20,000 h 的径向力[5][6]	Radial force for 20,000 h[5][6]	$F_{r\,20.000\,h}$	N	2300	4100	5150
20,000 h 的轴向力[5][6]	Axial force for 20,000 h[5][6]	$F_{a\,20.000\,h}$		2850	5450	6450
30,000 h 的径向力[5][6]	Radial force for 30,000 h[5][6]	$F_{r\,30.000\,h}$		2000	3650	4550
30,000 h 的轴向力[5][6]	Axial force for 30,000 h[5][6]	$F_{a\,30.000\,h}$		2500	4800	5600
最大径向力[6][7]	Maximum radial force[6][7]	$F_{r\,Stat}$		2700	4950	7200
最大轴向力[6][7]	Maximum axial force[6][7]	$F_{a\,Stat}$		2850	5450	6450
20,000 h 倾斜力矩[5][7]	Tilting moment for 20,000 h[5][7]	$M_{K\,20.000\,h}$	Nm	110	278	407
30,000 h 倾斜力矩[5][7]	Tilting moment for 30,000 h[5][7]	$M_{K\,30.000\,h}$		96	248	360

转动惯量	Moment of inertia			NGV064	NGV090	NGV110
转动惯量[3]	Mass moment of inertia[3]	J	$kgcm^2$	0,066 - 0,132	0,367 - 0,667	1,416 - 2,432

(1) 传动比 ($i=n_1/n_2$)
(2) 利用 NCP 针对应用设计转速 – www.neugart.com.
(3) 传动比相关的数值可在 Tec Data Finder 中检索 – www.neugart.com
(4) 允许 1000 次
(5) 数据以 n_2=100 min-1 的输出轴转速为准。
(6) 基于输出轴末端
(7) 更改 T_{2N}, F_r, F_a 以及周期和轴承使用寿命时，数值存在偏差（部分较高）。利用 NCP 针对应用进行专门设计 – www.neugart.com

(1) Ratios ($i=n_1/n_2$)
(2) Ratio-dependent. Application-specific speed configurations with NCP – www.neugart.com
(3) The ratio-dependent values can be retrieved in Tec Data Finder – www.neugart.com
(4) Permitted 1000 times
(5) These values are based on an output shaft speed of n_2=100 rpm
(6) Based on the end of the output shaft
(7) Other (sometimes higher) values following changes to T_{2N}, F_r, F_a, cycle, and service life of bearing. Application specific configuration with NCP – www.neugart.com

NGV（减速机） NGV gearbox incl. wheel

NGV064
NGV090 NGV110

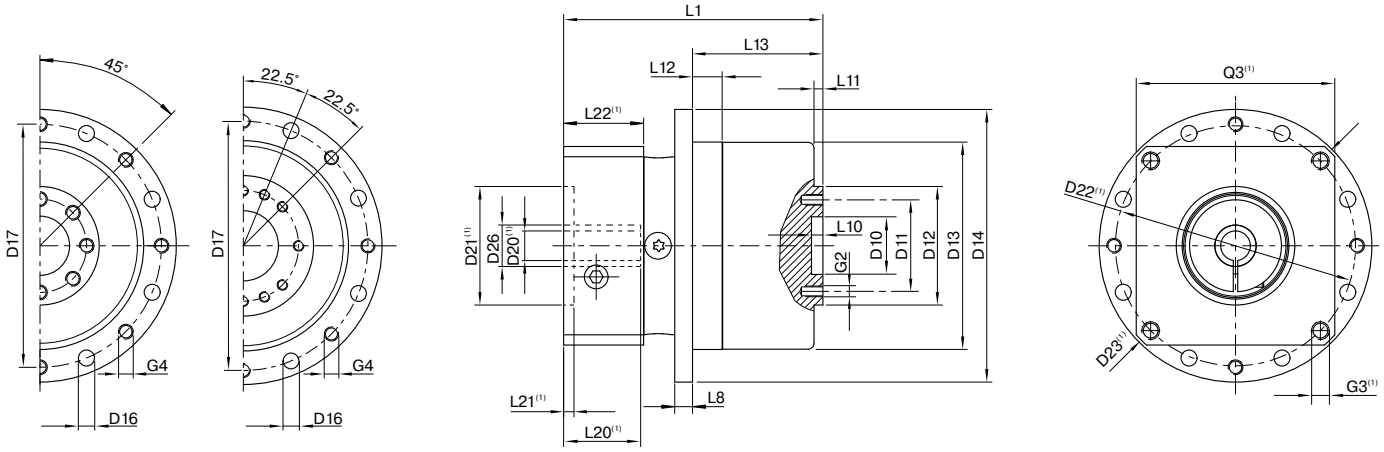

图示为带平键的 NGV090 / 2 级 / 法兰输出轴 / 19 mm 锁紧系统 / 适配电机法兰 - 单一法兰 / B5 电机法兰类型
Drawing corresponds to a NGV090 / 2-stage / flange output shaft / 19 mm clamping system / motor adaptation – one part / B5 flange type motor

(1) 具体尺寸视电机/减速机法兰而定。可以在 www.neugart.com 下 Tec Data Finder，中针对每个电机适配电机特有的输入法兰几何尺寸。
(1) The dimensions vary with the motor/gearbox flange. The input flange dimensions can be retrieved for each specific motor in Tec Data Finder at www.neugart.com

几何尺寸(2)	Geometry(2)			NGV064	NGV090	NGV110
输出端定位凹槽直径	Centering diameter output shaft	D10	H7	20	31,5	40
输出端安装孔节圆直径	Pitch circle diameter output shaft	D11		31.5	50	63
法兰输出轴的直径	Flange output shaft diameter	D12	h7	40	63	80
输出法兰定位凸台直径	Centering diameter output flange	D13	h9	70	94	120
输出法兰直径	Flange diameter output	D14	h9	92	120	158
输出端安装孔直径	Mounting bore output	D16		Ø 5,4 8x45°	Ø 6.6 8x45°	Ø 9 8x45°
输出法兰安装孔节圆直径	Pitch circle diameter output flange	D17		82	108	142
最小总长	Min. total length	L1		84.5	118	144
输出端法兰厚度	Flange thickness output	L8		6	8	10
输出轴定位凸台深度	Centering depth output shaft	L10		4	6	6
		L11		3	6	6,5
输出法兰定位凸台深度	Centering depth output flange	L12		10	15	21
输出法兰长度	Output flange length	L13		44	59,5	80
输入端锁紧系统直径	Clamping system diameter input	D26		11	19	24
				14	24	35
				19	-	-
电机轴直径 j6/k6	Motor shaft diameter j6/k6	D20		5 - 19	8 - 24	11 - 35
最大允许的电机轴长	Permissible motor shaft length	L20		更多信息见第 155/156 页 More information on page 155/156		
输入端定位凹槽直径	Centering diameter input	D21				
法兰输出轴 (相似的 EN ISO 9409-1)	Flange output shaft (similar EN ISO 9409-1)					
数量 x 螺纹 x 深度	Number x thread x depth	G2		8 x M5x7	8 x M6x10	12 x M6x12
数量 x 螺纹	Number x thread	G4		8 x M5	8 x M6	8 x M8

(2) 所有的尺寸单位为mm

(2) Dimensions in mm

NGV 配轮 NGV wheel

NGV 车轮 160 NGV wheel 160
NGV 车轮 200 NGV wheel 200

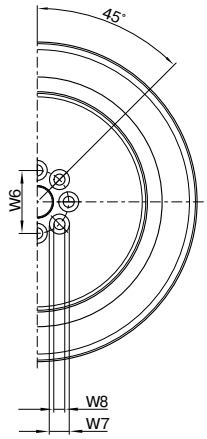

NGV 车轮 250 NGV wheel 250

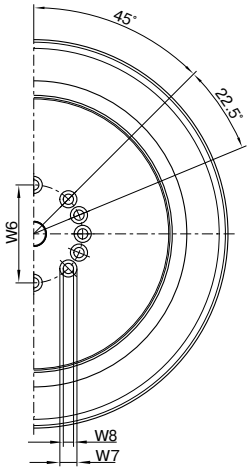

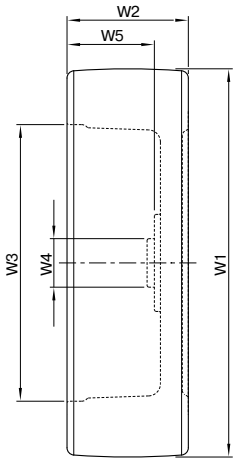

NGV 配轮的几何形状(1)	Geometry NGV wheel(1)			NGV 车轮 160 NGV wheel 160	NGV 车轮 200 NGV wheel 200	NGV 车轮 250 NGV wheel 250
配轮的外径	Outer diameter of wheel	W1		160 ± 1,2	200 ± 1,2	250 ± 1,2
配轮的宽度	Width of wheel	W2		50 ± 0,5	60 ± 0,5	80 ± 0,5
轮缘的内径	Inner diameter of rim	W3		114	155	183
定位凸台的外径	Centering outside diameter	W4	h7	20	31,5	40
轮缘深度	Rim depth	W5		36 ± 0,2	47,5 ± 0,2	66 ± 0,2
螺纹连接配件的节距圆直径	Screw connection pitch circle diameter	W6		31,5	50	63
螺纹连接配件（顶端）的直径	Screw connection head diameter	W7	H13	8 x Ø 10	8 x Ø 11	12 x Ø 11
螺纹连接配件的直径	Screw connection diameter	W8	H13	8 x Ø 5,5	8 x Ø 6,6	12 x Ø 6,6

供货范围：NGV车轮含螺丝和密封盖

Scope of delivery: NGV wheel incl. screws and closure cap

NGV 配轮的特征值	Characteristics NGV wheel			NGV 车轮 160 NGV wheel 160	NGV 车轮 200 NGV wheel 200	NGV 车轮 250 NGV wheel 250
重量	Weight		kg	ca. 2,3	ca. 3,7	ca. 7,6
转动惯量	Mass inertia	J_R	kgcm²	74	203	644
滚动阻力(2)	Roll resistance(2)		N	65	95	165
摩擦系数（静摩擦）(3)	Friction coefficient (static friction)(3)	μ		> 0.25		
地面保护（对应着配轮的接触压力）	Floor protection (corresponds to surface pressure of wheel)		N/mm²	8,0		
温度范围	Temperature range			-30°C 至 +70°C , 短时间内可达 +90°C 。 如果环境温度超过了 +40°C 承载能力将会下降。 For short periods. The load-bearing capacity is reduced at ambient temperatures higher than +40°C.		
胎面	Tread			Blickle Besthane®		
胎面颜色	Tread color			褐 / Brown		
铺砌面硬度	Tread hardness			92° Shore A		
轮体	Wheel unit			灰色铸件 / Gray cast iron		
轮体颜色	Wheel unit color			银 / Silver		
防腐蚀剂	Corrosion protection			轮体, 漆面 / Wheel unit, painted		
胎面属性（根据胎面制造商的介绍）	Tread characteristics (according to tread manufacturer)			低噪音运行，极低的滚动阻力，动态承载能力较高，地面保护，抗磨损， 耐切割 ，耐撕扯，不落痕迹，不着色。 Low-noise operation, extremely low rolling resistance, high dynamic loading capability, floor protecting, extremely abrasion resistant, high degree of cutting and tear resistance, traceless, contact coloration-free.		

(1) 所有的尺寸单位为 mm
(2) 实验数值。速度为 4 km/h 且达到最大负载时。
(3) 摩擦系数视地面而定。当 NGV 配轮在干燥的、磨光的钢轨道上运行时，摩擦系数 μ=0.25 。

(1) Dimensions in mm
(2) Empirical values. At 4 km/h and with maximum load.
(3) Friction coefficient depending on subsurface. Specification μ=0.25 with NGV wheel on ground, dry steel rail.

PK1 ▪ PM1

整合的减速机/齿轮组合：为您的齿条应用提升价值。

齿轮是齿条驱动装置的核心元件。它将减速机的旋转运动转化为线性运动。Neugart 齿轮预先安装在减速机上，并用螺钉固定。这样，这个由减速机与齿轮构成的紧凑单元可以快速地组装在设备里，由此节省了额外的安装工作。

The integrated gearbox/pinion combination: Added value for your toothed rack applications.

The pinion is the essential element of the rack and pinion drive for converting the rotatory movement of the gearbox into a linear movement. The Neugart pinion is pre-mounted on the gearbox and secured with screws. This means that the compact unit consisting of the gearbox and the pinion can be quickly installed in the application, and less installation work is required.

PK 1 小齿轮
PK 1 Pinion

模数 Module	**2-5**
齿数 Number of teeth	**15-27**
最大进给力 Maximum feed force	**4-31 kN**

PM 1 小齿轮
PM 1 Pinion

模数 Module	**2-4**
齿数 Number of teeth	**26-45**
最大进给力 Maximum feed force	**2-14 kN**

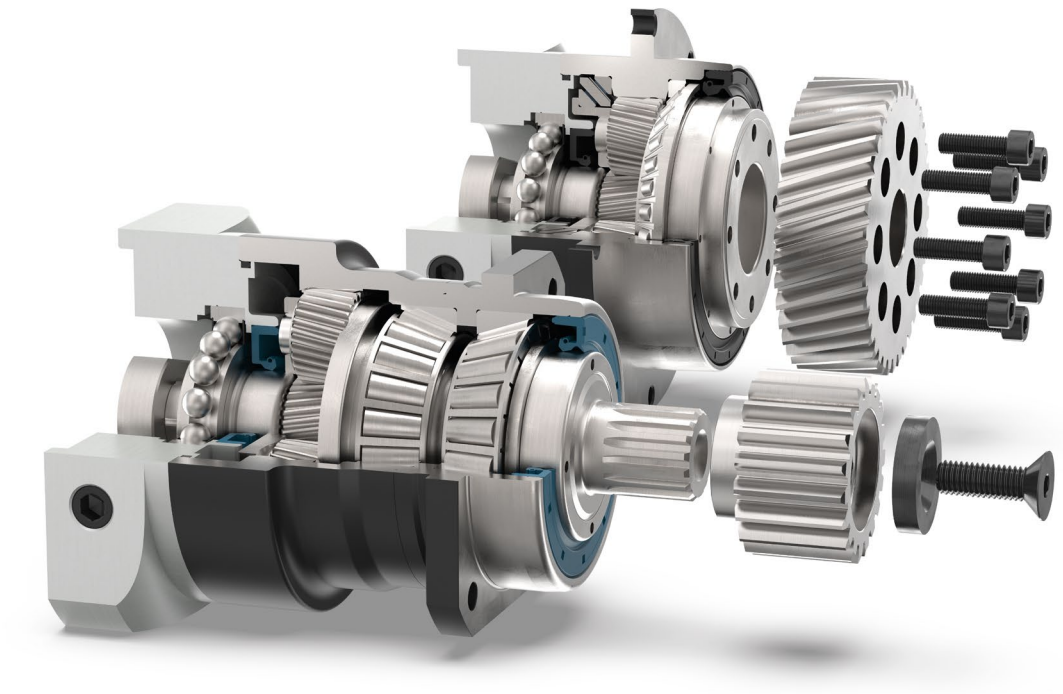

根据所选的减速机不同，可能具有以下特征：

Depending on the gearbox selected, the following features are available:

- 经济型 Economy Line
- 精密型 Precision Line
- 同轴减速机 Coaxial gearbox
- 直角型减速机 Right angle gearbox
- 直齿齿轮 Pinion with straight teeth
- 斜齿齿轮 Pinion with helical teeth
- 配有预紧的圆锥滚子轴承 Preloaded tapered roller bearings
- 配有预紧的角接触滚子轴承 Preloaded angular contact roller bearings
- 输出端带有超长定心环 Extra long centering collar
- 圆形特大号输出法兰 Extra large round type output flange
- 正方形输出法兰 Square type output flange
- 径向轴密封 Rotary shaft seal
- 可选：降低回程间隙 Option: Reduced backlash

技术特点的详细解释，请从第169页读起。
Detailed explanations of the technical features starting on page 169.

斜齿齿轮

螺旋角 β = -19.5283° （左旋）
压力角 20°
经过硬化和磨削
精度等级 6 级

Pinion with helical teeth

Helix angle β = -19,5283° (rising to the left)
Angle of pressure 20°
hardened and ground
Quality 6

小齿轮型号	模数	齿数	节圆直径	变位系数	齿轮节圆直径	进给常量	齿轮重量	最大扭矩	最大进给力	适用减速机 (1)(2)			
Pinion type	**Module**	**Number of teeth**	**Pitch circle diameter**	**Profile modifi-cation factor**	**Operating pitch circle diameter**	**Feed constant**	**Pinion weight**	**Max. torque**	**Max. feed force**	**Suitable for gearbox(1)(2)**			
	m	z	d_0	x	d_W	$d_0 \times \pi$	m_P	T_{vmax}	F_V				
	mm		mm		mm	mm/U	kg	Nm	N				
PK1	2	15	31,831	0,55	34,03	100,00	0,16	90	5650	PSN070	PLN070	WPLN070	PLHE060
PK1	2	16	33,953	0,55	36,15	106,67	0,18	103	6060				
PK1	2	18	38,197	0,45	40,00	120,00	0,23	141	7380				
PK1	2	18	38,197	0,45	40,00	120,00	0,21	141	7380	PSN090	PLN090	WPLN090	PLHE080
PK1	2	20	42,441	0,45	44,24	133,33	0,27	183	8620				
PK1	2	22	46,686	0,45	48,49	146,67	0,33	218	9330				
PK1	2	23	48,808	0,45	50,61	153,33	0,32	229	9380	PSN115	PLN115	WPLN115	PLHE120
PK1	2	25	53,052	0,45	54,85	166,67	0,39	250	9420				
PK1	2	27	57,296	0,35	58,70	180,00	0,46	275	9590				
PK1	3	20	63,662	0,45	66,36	200,00	0,69	534	16770				
PK1	3	20	63,662	0,45	66,36	200,00	0,77	534	16770	PSN142	PLN142	WPLN142	-
PK1	3	22	70,028	0,45	72,73	220,00	0,94	602	17190				
PK1	3	24	76,394	0,45	79,09	240,00	1,12	660	17270				
PK1	4	20	84,883	0,40	88,08	266,67	1,64	1295	30510	PSN190	PLN190	-	-

直齿齿轮

螺旋角 β = 0°
压力角 20°
经过硬化和磨削
精度等级 6 级

Pinion with straight teeth

Helix angle β = 0°
Angle of pressure 20°
hardened and ground
Quality 6

小齿轮型号	模数	齿数	节圆直径	变位系数	齿轮节圆直径	进给常量	齿轮重量	最大扭矩	最大进给力	适用减速机 (1)(2)			
Pinion type	**Module**	**Number of teeth**	**Pitch circle diameter**	**Profile modifi-cation factor**	**Operating pitch circle diameter**	**Feed constant**	**Pinion weight**	**Max. torque**	**Max. feed force**	**Suitable for gearbox(1)(2)**			
	m	z	d_0	x	d_W	$d_0 \times \pi$	m_P	T_{vmax}	F_V				
	mm		mm		mm	mm/U	kg	Nm	N				
PK1	2	16	32,00	0,50	34,00	100,53	0,16	61	3810	PSN070	PLN070	WPLN070	PLHE060
PK1	2	19	38,00	0,40	39,60	119,38	0,20	94	4940	PSN090	PLN090	WPLN090	PLHE080
PK1	3	17	51,00	0,40	53,40	160,22	0,40	225	8820	PSN115	PLN115	WPLN115	PLHE120
PK1	3	22	66,00	0,20	67,20	207,35	0,79	397	12030	PSN142	PLN142	WPLN142	-
PK1	4	19	76,00	0,30	78,40	238,76	1,32	712	18730				
PK1	4	22	88,00	0,20	89,60	276,46	1,71	986	22400	PSN190	PLN190	-	-
PK1	5	19	95,00	0,40	99,00	298,45	2,38	1481	31170				

(1) 利用 NCP 针对应用进行专门设计. 您可以查看产品页，或者访问 www.neugart.com 网站，进一步了解各种减速机
(2) 输出扭矩取决于减速机的传动比。

(1) Application specific configuration with NCP.
More information about the gearboxes can be found on the product pages or at www.neugart.com
(2) The nominal output torque depends on the transmission ratio.

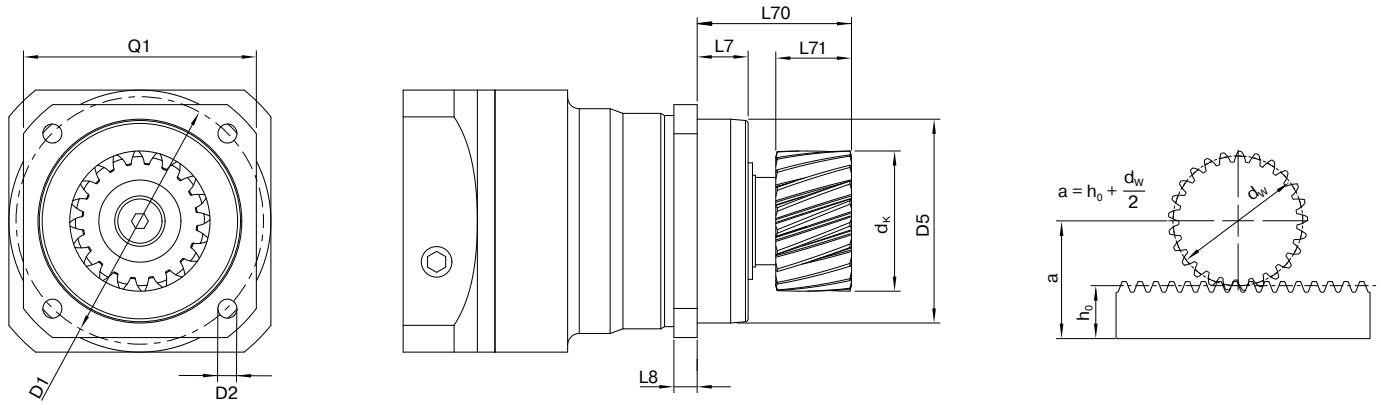

斜齿齿轮 Pinion with helical teeth

结构尺寸 Frame size	小齿轮型号 Pinion type	模数 Module	齿数 Number of teeth	齿顶圆直径 Tip diameter	齿轮节圆直径 Operating pitch circle diameter	中心距 (1) Center distance(1)	输出轴的长度(包含齿轮) Output shaft length with pinion	齿轮宽度 Pinion width	定位凸台高度 Centering depth	输出端法兰厚度 Flange thickness output	节距圆直径 Pitch circle diameter	安装孔 Mounting bore	定心直径 Centering diameter	法兰横截面 Flange cross section
		m	z	d_K	d_W	a	L70	L71	L7	L8	D1	D2	D5	Q1
		mm		mm	mm	mm	mm	mm	mm	mm	mm	mm	mm	mm
060 / 070	PK1	2	15	37,95	34,03	39,02	52	26	19	7	68-75	5,5	60 g7	70
	PK1	2	16	40,07	36,15	40,08	52	26	19	7	68-75	5,5	60 g7	70
	PK1	2	18	43,92	40,00	42,00	52	26	19	7	68-75	5,5	60 g7	70
080 / 090	PK1	2	18	43,92	40,00	42,00	53	26	17,5	8	85	6,5	70 g7	80
	PK1	2	20	48,16	44,24	44,12	53	26	17,5	8	85	6,5	70 g7	80
	PK1	2	22	52,40	48,49	46,24	53	26	17,5	8	85	6,5	70 g7	80
115 / 120	PK1	2	23	54,53	50,61	47,30	64	26	28	10	120	9,0	90 g7	110
	PK1	2	25	58,74	54,85	49,43	64	26	28	10	120	9,0	90 g7	110
	PK1	2	27	62,59	58,70	51,35	64	26	28	10	120	9,0	90 g7	110
	PK1	3	20	72,25	66,36	59,18	69,5	31	28	10	120	9,0	90 g7	110
142	PK1	3	20	72,25	66,36	59,18	81	31	28	12	165	11,0	130 g7	142
	PK1	3	22	76,62	72,73	62,36	81	31	28	12	165	11,0	130 g7	142
	PK1	3	24	84,99	79,09	65,55	81	31	28	12	165	11,0	130 g7	142
190	PK1	4	20	95,97	88,08	79,04	84	41	28	15	215	13,5	160 g7	190

直齿齿轮 Pinion with straight teeth

结构尺寸 Frame size	小齿轮型号 Pinion type	模数 Module	齿数 Number of teeth	齿顶圆直径 Tip diameter	齿轮节圆直径 Operating pitch circle diameter	中心距 (1) Center distance(1)	输出轴的长度(包含齿轮) Output shaft length with pinion	齿轮宽度 Pinion width	定位凸台高度 Centering depth	输出端法兰厚度 Flange thickness output	节距圆直径 Pitch circle diameter	安装孔 Mounting bore	定心直径 Centering diameter	法兰横截面 Flange cross section
		m	z	d_K	d_W	a	L70	L71	L7	L8	D1	D2	D5	Q1
		mm		mm	mm	mm	mm	mm	mm	mm	mm	mm	mm	mm
060 / 070	PK1	2	16	37,92	34,00	39,00	52	26	19	7	68 -75	5,5	60 g7	70
080 / 090	PK1	2	19	43,52	39,60	41,80	53	26	17,5	8	85	6,5	70 g7	80
115 / 120	PK1	3	17	59,29	53,40	52,70	69,5	31	28	10	120	9,0	90 g7	110
142	PK1	3	22	73,09	67,20	59,60	81	31	28	12	165	11,0	130 g7	142
	PK1	4	19	86,29	78,40	74,20	84	41	28	12	165	11,0	130 g7	142
190	PK1	4	22	97,49	89,60	79,80	84	41	28	15	215	13,5	160 g7	190
	PK1	5	19	108,89	99,00	83,50	84	51	28	15	215	13,5	160 g7	190

(1) 适用于标准齿条高度 (h_0)。模数 2 (h_0 = 22 mm)，模数 3 (h_0 = 26 mm)，模数 4 (h_0 = 35 mm)，模数 5 (h_0 = 34 mm)。

(1) For standard toothed rack height h_0. Module 2 (h_0 = 22 mm), Module 3 (h_0 = 26 mm), Module 4 (h_0 = 35 mm), Module 5 (h_0 = 34 mm).

斜齿齿轮

螺旋角 β = -19.5283° （左旋）
压力角 20°
经过硬化和磨削
精度等级 6级

Pinion with helical teeth

Helix angle β = -19,5283° (rising to the left)
Angle of pressure 20°
hardened and ground
Quality 6

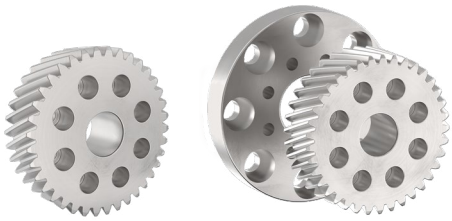

小齿轮型号	模数	齿数	转接法兰(已包括)[3]	节圆直径	变位系数	齿轮节圆直径	进给常量	齿轮重量	最大扭矩	最大进给力	适用减速机[1][2]				
Pinion type	**Module**	**Number of teeth**	**Ouptut flange (incl.)[3]**	**Pitch circle diameter**	**Profile modification factor**	**Operating pitch circle diameter**	**Feed constant**	**Pinion weight**	**Max. torque**	**Max. feed force**	**Suitable for gearbox[1][2]**				
	m	z		d_0	x	d_W	$d_0 \times \pi$	m_P	T_{vmax}	F_V					
	mm			mm		mm	mm/U	kg	Nm	N					
PM1	2	26	–	55,174	0,40	56,77	173,33	0,43	81	2930	PSFN064	PLFN064	WPSFN064	PFHE064	3)
PM1	2	27	–	57,296	0,35	58,70	180,00	0,47	82	2860					
PM1	2	26	064→090	55,174	0,40	56,77	173,33	0,60	81	2930	PSFN090	PLFN090	WPSFN090	PFHE090	4)
PM1	2	27	064→090	57,296	0,35	58,70	180,00	0,64	82	2860					
PM1	2	35	064→090	74,272	0,35	75,67	233,33	1,00	90	2420					
PM1	2	37	–	78,517	0,35	79,92	246,67	0,89	176	4480	PSFN090	PLFN090	WPSFN090	PFHE090	3)
PM1	2	26	064→110	55,174	0,40	56,77	173,33	0,76	81	2930	PSFN110	PLFN110	WPSFN110	PFHE110	4)
PM1	2	27	064→110	57,296	0,35	58,70	180,00	0,79	82	2860					
PM1	2	35	064→110	74,272	0,35	75,67	233,33	1,16	90	2420					
PM1	2	40	–	84,883	0,35	86,28	266,67	0,94	312	7350	PSFN110	PLFN110	WPSFN110	PFHE110	3)
PM1	2	45	–	95,493	0,30	96,69	300,00	1,25	328	6860					
PM1	2	37	090→140	78,517	0,35	79,92	246,67	1,54	176	4480	PSFN140	PLFN140	WPSFN140	–	4)
PM1	3	31	090→140	98,676	0,35	100,78	310,00	2,40	193	3910					
PM1	3	35	–	111,409	0,35	113,51	350,00	2,18	783	14050	PSFN140	PLFN140	WPSFN140	–	3)
PM1	3	40	–	127,324	0,35	129,42	400,00	2,92	829	13020					
PM1	4	30	–	127,324	0,20	128,92	400,00	3,67	827	12990					
PM1	3	35	140→200	111,409	0,35	113,51	350,00	4,20	783	14050	PSFN200	PLFN200	–	–	4)
PM1	3	40	140→200	127,324	0,35	129,42	400,00	4,93	829	13020					
PM1	4	30	140→200	127,324	0,20	128,92	400,00	5,68	827	12990					

(1) 利用 NCP 针对应用进行专门设计 。您可以查看产品页，或者访问 www.neugart.com 网站，进一步了解各种减速机
(2) 输出扭矩取决于减速机的传动比 。

(1) Application specific configuration with NCP. More information about the gearboxes can be found on the product pages or at www.neugart.com
(2) The nominal output torque depends on the transmission ratio.

3) 直接安装齿轮

3) Direct mounting of the pinion

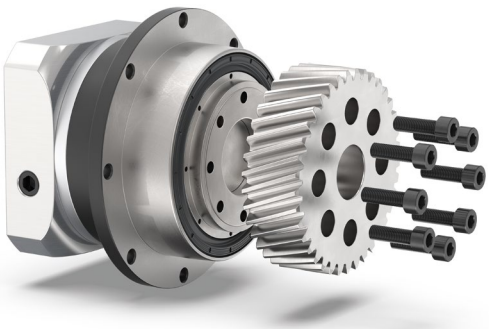

适用于 090 减速机尺寸的 PSFN090 (带有 PM1 齿轮)

PSFN090 with PM1 pinion for gearbox frame size 090

4) 转接法兰的使用（用于安装齿轮）

4) Use of an adapter flange for installing the pinion

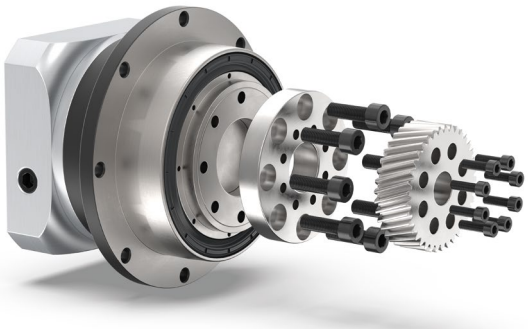

带有转接法兰的 PSFN090 (064→090)
与 PM1 齿轮（适用于 064 减速机齿轮）

PSFN090 with adapter flange (064→090)
and PM1 pinion for gearbox frame size 064

结构尺寸
064, 090 和 110

Frame size
064, 090 and 110

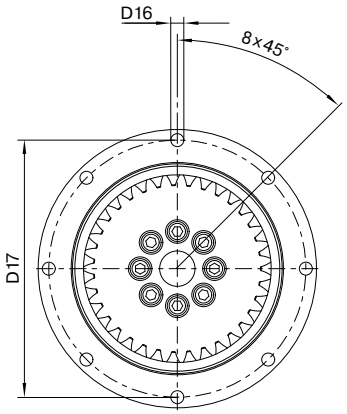

结构尺寸
140 和 200

Frame size
140 and 200

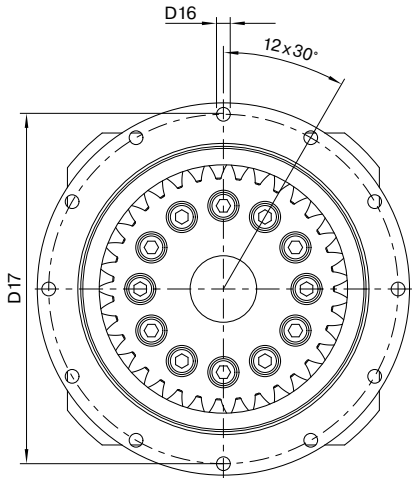

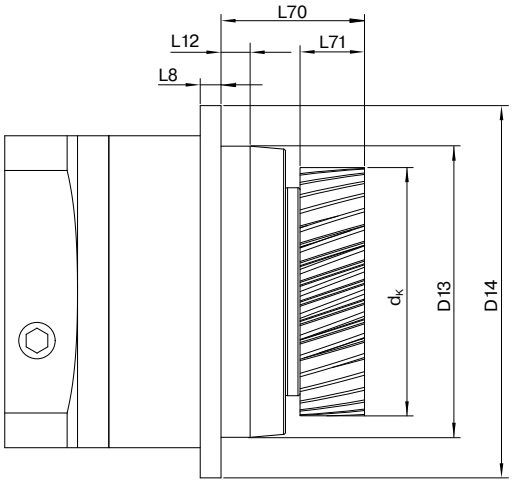

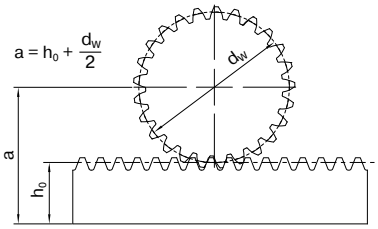

斜齿齿轮

Pinion with helical teeth

结构尺寸	小齿轮型号	模数	齿数	转接法兰(已包括)	齿顶圆直径	齿轮节圆直径	中心距[1]	输出轴的长度(包含齿轮)	齿轮宽度	输出端法兰厚度	定位凸台高度	定心直径	输出法兰	安装孔	节距圆直径
Frame size	**Pinion type**	**Module**	**Number of teeth**	**Output flange (incl.)**	**Tip diameter**	**Operating circle diameter**	**Center distance[1]**	**Output shaft length with pinion**	**Pinion width**	**Flange thickness output**	**Centering depth**	**Center diameter**	**Flange diameter**	**Mounting bore**	**Pitch circle diameter**
		m	z		d_K	d_W	a	L70	L71	L8	L12	D13	D14	D16	D17
		mm			mm	mm	mm	mm	mm	mm	mm	mm	mm	mm	mm
064	PM1	2	26	-	60,66	56,77	50,39	45,5	26	4	10	64 h7	86	4,5 8x45°	79
	PM1	2	27	-	62,59	58,70	51,35	45,5	26	4	10	64 h7	86	4,5 8x45°	79
090	PM1	2	26	064→090	60,66	56,77	50,39	66	26	7	12	90 h7	118	5,5 8x45°	109
	PM1	2	27	064→090	62,59	58,70	51,35	66	26	7	12	90 h7	118	5,5 8x45°	109
	PM1	2	35	064→090	79,56	75,67	59,84	66	26	7	12	90 h7	118	5,5 8x45°	109
	PM1	2	37	-	83,81	79,92	61,96	56	26	7	12	90 h7	118	5,5 8x45°	109
110	PM1	2	26	064→110	60,66	56,77	50,39	65	26	8	12	110 h7	145	5,5 8x45°	135
	PM1	2	27	064→110	62,59	58,70	51,35	65	26	8	12	110 h7	145	5,5 8x45°	135
	PM1	2	35	064→110	79,56	75,67	59,84	65	26	8	12	110 h7	145	5,5 8x45°	135
	PM1	2	40	-	90,17	86,28	65,14	55	26	8	12	110 h7	145	5,5 8x45°	135
	PM1	2	45	-	100,58	96,69	70,35	55	26	8	12	110 h7	145	5,5 8x45°	135
140	PM1	2	37	090→140	83,81	79,92	61,96	77	26	10	14	140 h7	179	6,6 12x30°	168
	PM1	3	31	090→140	106,67	100,78	76,39	82	31	10	14	140 h7	179	6,6 12x30°	168
	PM1	3	35	-	119,40	113,51	82,75	69	31	10	14	140 h7	179	6,6 12x30°	168
	PM1	3	40	-	135,27	129,42	90,71	69	31	10	14	140 h7	179	6,6 12x30°	168
	PM1	4	30	-	136,77	128,92	99,46	79	41	10	14	140 h7	179	6,6 12x30°	168
200	PM1	3	35	140→200	119,40	113,51	82,75	100	31	12	17,5	200 h7	247	9,0 12x30°	233
	PM1	3	40	140→200	135,27	129,42	90,71	100	31	12	17,5	200 h7	247	9,0 12x30°	233
	PM1	4	30	140→200	136,77	128,92	99,46	110	41	12	17,5	200 h7	247	9,0 12x30°	233

[1] 适用于标准齿条高度 (h_0)。模块 2 (h_0 = 22 mm)，模块 3 (h_0 = 26 mm)，模块 4 (h_0 = 35 mm)。

[1] For standard toothed rack height h_0. Module 2 (h_0 = 22 mm), Module 3 (h_0 = 26 mm), Module 4 (h_0 = 35 mm).

选项：输出法兰规格 Option: Output flange design

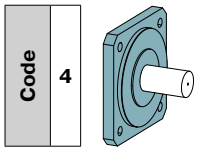

针对 PLN
For PLN

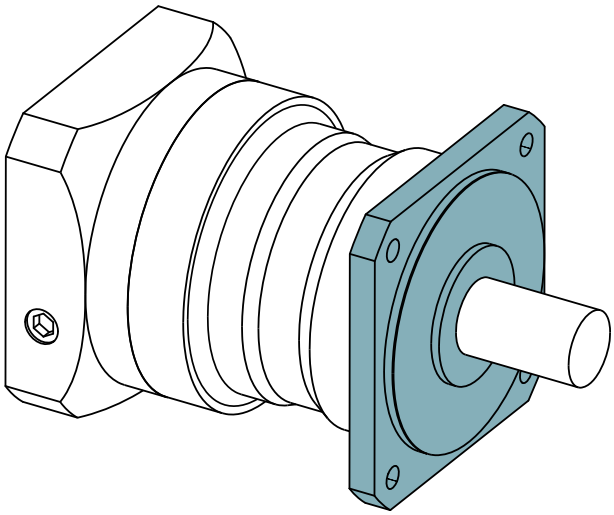

其他规格的减速机特点,输出轴负载,输出扭矩、输入转速和尺寸没有列在这里，对应于细节在92到95页。

Other specifications for gearbox characteristics, output shaft loads, output torques, input speeds and dimensions not listed here correspond to the details on pages 92 to 95.

输出轴载荷	**Output shaft loads**			**PLN070**	**PLN090**	**PLN115**	**PLN142**	**PLN190**	**p[1]**
20,000 h 的径向力[2][3]	Radial force for 20,000 h[2][3]	$F_{r\,20.000\,h}$	N	4200	5500	6000	12500	21000	
30,000 h 的径向力[2][3]	Radial force for 30,000 h[2][3]	$F_{r\,30.000\,h}$		3700	4800	5400	11400	18000	
最大径向力[3][4]	Maximum radial force[3][4]	$F_{r\,Stat}$		4200	5500	6000	12500	21000	
20,000 h 倾斜力矩[2][4]	Tilting moment for 20,000 h[2][4]	$M_{K\,20.000\,h}$	Nm	251	383	488	1420	2535	
30,000 h 倾斜力矩[2][4]	Tilting moment for 30,000 h[2][4]	$M_{K\,30.000\,h}$		221	335	439	1295	2173	

输入转速	**Input speeds**			**PLN070**	**PLN090**	**PLN115**	**PLN142**	**PLN190**	**i[5]**	**p[1]**
T_{2N} 和 S1 时的平均热输入转速[6][7]	Average thermal input speed at T_{2N} and S1[6][7]	n_{1N}	min^{-1}	1850[8]	1800[8]	1400[8]	800[8]	650[8]	3	1
				2150[8]	1950[8]	1450[8]	850[8]	700[8]	4	
				2450[8]	2350[8]	1850[8]	950[8]	750[8]	5	
				3200[8]	3300[8]	2600[8]	1400[8]	1100[8]	7	
				3500[8]	3700[8]	2950[8]	1650[8]	1350[8]	8	
				4050[8]	4000[8]	3500[8]	2100[8]	1750[8]	10	
				3300[8]	3150[8]	2300[8]	1200[8]	950[8]	12	2
				3700[8]	3750[8]	2750[8]	1450[8]	1150[8]	15	
				3500[8]	3300[8]	2400[8]	1200[8]	1000[8]	16	
				4000[8]	3900[8]	2850[8]	1500[8]	1200[8]	20	
				4350[8]	4000[8]	3150[8]	1700[8]	1300[8]	25	
				4500[8]	4000	3500[8]	2100[8]	1750[8]	32	
				4500	4000	3500	2350[8]	1900[8]	40	
				4500	4000	3500	2950[8]	2400[8]	64	
				4500	4000	3500	3000	2500	100	

(1) 减速机级数
(2) 数据以 n_2=100 min^{-1} 的输出轴转速为准。
(3) 以输出轴中心为准
(4) 更改 T_{2N}, F_r, F_a 以及周期和轴承使用寿命时, 数值存在偏差(部分较高)。利用 NCP 针对应用进行专门设计 – www.neugart.com
(5) 传动比 ($i=n_1/n_2$)
(6) 利用 NCP 针对应用设计转速 – www.neugart.com
(7) 定义请参见第 158 页
(8) 在 50% T_{2N} 输出和 S1 模式下 的平均热传动转速

(1) Number of stages
(2) These values are based on an output shaft speed of n_2=100 rpm
(3) Based on center of output shaft
(4) Other (sometimes higher) values following changes to T_{2N}, F_r, F_a, cycle, and service life of bearing. Application specific configuration with NCP – www.neugart.com
(5) Ratios ($i=n_1/n_2$)
(6) Application-specific speed configurations with NCP – www.neugart.com
(7) See page 159 for the definition
(8) Average thermal input speed at 50% T_{2N} and S1

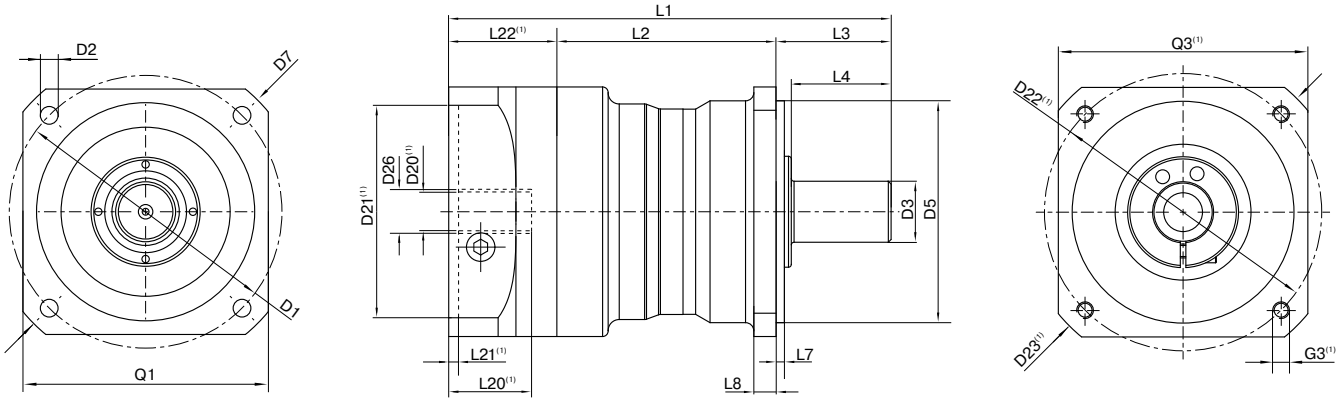

图示为带平键的 PLE060 / 1 级 / 附带平键的输出轴 / 11 mm 锁紧系统 / 适配电机法兰 - 单一法兰 / B5 电机法兰类型
Drawing corresponds to a PLN090 / 1-stage / smooth output shaft / output flange PLS-compatible /19 mm clamping system / motor adaptation – 2-part – round universal flange / B5 flange type motor

(1) 具体尺寸视电机/减速机法兰而定。可以在 www.neugart.com 下 Tec Data Finder，中针对每个电机适配电机特有的输入法兰几何尺寸。
(1) The dimensions vary with the motor/gearbox flange. The input flange dimensions can be retrieved for each specific motor in Tec Data Finder at www.neugart.com

几何尺寸(2)	Geometry(2)			PLN070	PLN090	PLN115	PLN142	PLN190	p(3)	Code
输出端安装孔节圆直径	Pitch circle diameter output	D1		75	100	130	165	215		
输出端安装孔直径	Mounting bore output	D2	4x	5,5	6,5	8,5	11,0	13,5		
输出轴直径	Shaft diameter output	D3	k6	19	22	32	40	55		
输出端定位凸台直径	Centering diameter output	D5	h7	60	80	110	130	160		
输出法兰对角线尺寸	Diagonal dimension output	D7		92	116	145	185	240		
输出端法兰外方	Flange cross section output	Q1	■	70	90	115	142	190		
最小总长	Min. total length	L1		137,5	159,5	201	276	310,5	1	
				166,5	191,5	241	335	382,5	2	
箱体长度	Housing length	L2		74,5	79	84,5	114,5	138	1	
				104	111	125	173,5	210	2	
输出轴轴长	Shaft length output	L3		32	41,5	64,5	87	90		
输出端定位凸台深度	Centering depth output	L7		3	3	4,5	5	6		
输出端法兰厚度	Flange thickness output	L8		7	8	10	20	20		
电机轴直径j6/k6	Motor shaft diameter j6/k6	D20		更多信息见第 155/156 页 More information on page 155/156						
输入端锁紧系统直径	Clamping system diameter input	D26								
带平键的输出轴（DIN 6885-1）	Output shaft with feather key (DIN 6885-1)			A 6x6x20	A 6x6x28	A 10x8x50	A 12x8x65	A 16x10x70		A
平键宽度（DIN 6885-1）	Feather key width (DIN 6885-1)	B1		6	6	10	12	16		
含平键在内的轴高（DIN 6885-1）	Shaft height including feather key (DIN 6885-1)	H1		21,5	24,5	35	43	59		
到轴肩的距离	Shaft length from shoulder	L4		28	36	58	80	82		
平键长度	Feather key length	L5		20	28	50	65	70		
到轴端的距离	Distance from shaft end	L6		4	4	4	8	6		
中心孔 (DIN 332 DR 形)	Center hole (DIN 332, type DR)	C		M6x16	M8x19	M12x28	M16x36	M20x42		
光滑输出轴	Smooth output shaft									B
到轴肩的距离	Shaft length from shoulder	L4		28	36	58	80	82		

(2) 所有的尺寸单位为mm
(3) 减速机级数

(2) Dimensions in mm
(3) Number of stages

选项：输出法兰规格 Option: Output flange design

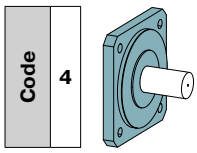

针对 WPLN
For WPLN

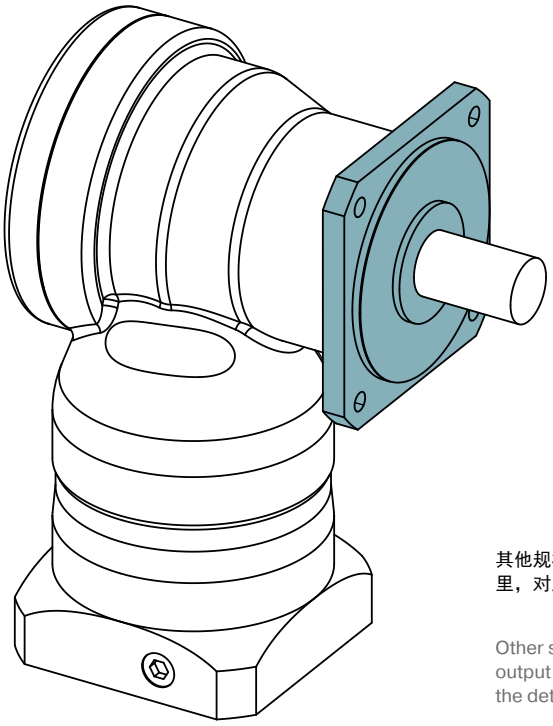

其他规格的减速机特点,输出轴负载,输出扭矩、输入转速和尺寸没有列在这里，对应于细节在110到113页。

Other specifications for gearbox characteristics, output shaft loads, output torques, input speeds and dimensions not listed here correspond to the details on pages 110 to 113.

输出轴载荷	Output shaft loads			WPLN070	WPLN090	WPLN115	WPLN142	p[1]
20,000 h 的径向力[2][3]	Radial force for 20,000 h[2][3]	$F_{r\,20.000\,h}$	N	4000	5200	6000	12500	1
				4200	5500	6000	12500	2
30,000 h 的径向力[2][3]	Radial force for 30,000 h[2][3]	$F_{r\,30.000\,h}$		3500	4800	6000	10900	1
				3700	4800	5400	11400	2
最大径向力[3][4]	Maximum radial force[3][4]	$F_{r\,Stat}$		4000	5200	6000	12500	1
				4200	5500	6000	12500	2
20,000 h 倾斜力矩[2][4]	Tilting moment for 20,000 h[2][4]	$M_{K\,20.000\,h}$	Nm	402	624	1010	2225	1
				422	660	1010	2225	2
30,000 h 倾斜力矩[2][4]	Tilting moment for 30,000 h[2][4]	$M_{K\,30.000\,h}$		352	576	1010	1940	1
				372	576	909	2029	2

输入转速	Input speeds			WPLN070	WPLN090	WPLN115	WPLN142	i[5]	p[1]
T_{2N} 和 S1 时的平均热输入转速[6][7]	Average thermal input speed at T_{2N} and S1[6][7]	n_{1N}	min^{-1}	1700[8]	1550[8]	1050[8]	900[8]	4	1
				1850[8]	1750[8]	1150[8]	950[8]	5	
				2150[8]	2100[8]	1300[8]	1150[8]	7	
				2200[8]	2100[8]	1350[8]	1150[8]	8	
				2300[8]	2200[8]	1400[8]	1200[8]	10	
				1700[8]	1650[8]	1550[8]	900[8]	16	2
				1850[8]	1900[8]	1800[8]	950[8]	20	
				2000[8]	2100[8]	2000[8]	1050[8]	25	
				2000[8]	2050[8]	2000[8]	1300[8]	28	
				2100[8]	2100[8]	2050[8]	1350[8]	32	
				2200[8]	2150[8]	2050[8]	1350[8]	35	
				2200[8]	2150[8]	2050[8]	1350[8]	40	
				2300[8]	2300[8]	2250[8]	1450[8]	50	
				2400[8]	2750[8]	2700[8]	1650[8]	64	
				2500[8]	2900[8]	2850[8]	1800[8]	100	

(1) 减速机级数
(2) 数据以 n_2=100 min^{-1} 的输出轴转速为准。
(3) 以输出轴中心为准
(4) 更改 T_{2N}, F_r, F_a 以及周期和轴承使用寿命时, 数值存在偏差(部分较高)。利用 NCP 针对应用进行专门设计 – www.neugart.com
(5) 传动比 ($i=n_1/n_2$)
(6) 利用 NCP 针对应用设计转速 – www.neugart.com
(7) 定义请参见第 158 页
(8) 在 50% T_{2N} 输出和 S1 模式下 的平均热传动转速

(1) Number of stages
(2) These values are based on an output shaft speed of n_2=100 rpm
(3) Based on center of output shaft
(4) Other (sometimes higher) values following changes to T_{2N}, F_r, F_a, cycle, and service life of bearing. Application specific configuration with NCP – www.neugart.com
(5) Ratios ($i=n_1/n_2$)
(6) Application-specific speed configurations with NCP – www.neugart.com
(7) See page 159 for the definition
(8) Average thermal input speed at 50% T_{2N} and S1

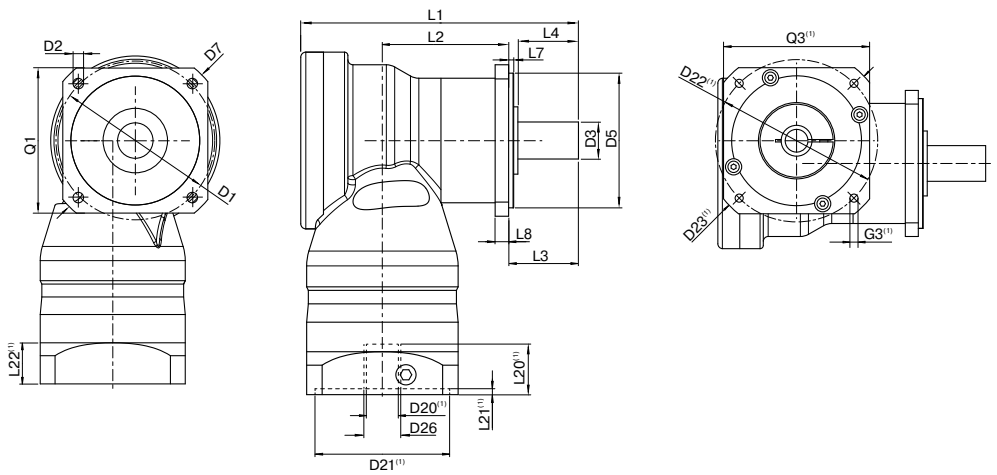

图示为带平键的 WPLN090 / 1 级 / 光滑输出轴 / 19 mm 锁紧系统 / 适配电机法兰 – 2 件式 – 圆形通用法兰 / B5 电机法兰类型
Drawing corresponds to a WPLN090 / 1-stage / smooth output shaft / output flange WPLS-compatible / 14 mm clamping system / motor adaptation – 2-part – round universal flange / B5 flange type motor

(1) 具体尺寸视电机/减速机法兰而定。可以在 www.neugart.com 下 Tec Data Finder，中针对每个电机适配电机特有的输入法兰几何尺寸。
(1) The dimensions vary with the motor/gearbox flange. The input flange dimensions can be retrieved for each specific motor in Tec Data Finder at www.neugart.com

几何尺寸(2)	Geometry(2)			WPLN070	WPLN090	WPLN115	WPLN142	p(3)	Code
输出端安装孔节圆直径	Pitch circle diameter output	D1		75	100	130	165		
输出端安装孔直径	Mounting bore output	D2	4x	5,5	6,5	8,5	11,0		
输出轴直径	Shaft diameter output	D3	k6	19	22	32	40		
输出端定位凸台直径	Centering diameter output	D5	h7	60	80	110	130		
输出法兰对角线尺寸	Diagonal dimension output	D7		92	116	145	185		
输出端法兰外方	Flange cross section output	Q1	■	70	90	115	142		
总长	Total length	L1		137,5	165	218	273	1	
				185	207	248,5	342,5	2	
箱体长度	Housing length	L2		62,5	75	97	99	1	
				110	122,5	135,5	199	2	
输出轴轴长	Shaft length output	L3		32	41,5	64,5	87		
输出端定位凸台深度	Centering depth output	L7		3	3	4,5	5		
输出端法兰厚度	Flange thickness output	L8		7	8	10	20		
电机轴直径j6/k6	Motor shaft diameter j6/k6	D20		更多信息见第 155/156 页 More information on page 155/156					
输入端锁紧系统直径	Clamping system diameter input	D26							
带平键的输出轴（DIN 6885-1）	Output shaft with feather key (DIN 6885-1)			A 6x6x20	A 6x6x28	A 10x8x50	A 12x8x65		A
平键宽度（DIN 6885-1）	Feather key width (DIN 6885-1)	B1		6	6	10	12		
含平键在内的轴高（DIN 6885-1）	Shaft height including feather key (DIN 6885-1)	H1		21,5	24,5	35	43		
到轴肩的距离	Shaft length from shoulder	L4		28	36	58	80		
平键长度	Feather key length	L5		20	28	50	65		
到轴端的距离	Distance from shaft end	L6		4	4	4	8		
中心孔 (DIN 332, DR 形)	Center hole (DIN 332, type DR)	C		M6x16	M8x19	M12x28	M16x36		
光滑输出轴	Smooth output shaft								B
到轴肩的距离	Shaft length from shoulder	L4		28	36	58	80		

(2) 所有的尺寸单位为mm
(3) 减速机级数

(2) Dimensions in mm
(3) Number of stages

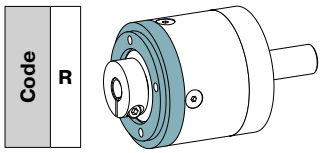

无适配电机法兰 – 圆形通用法兰

No motor adaptation – round universal flange

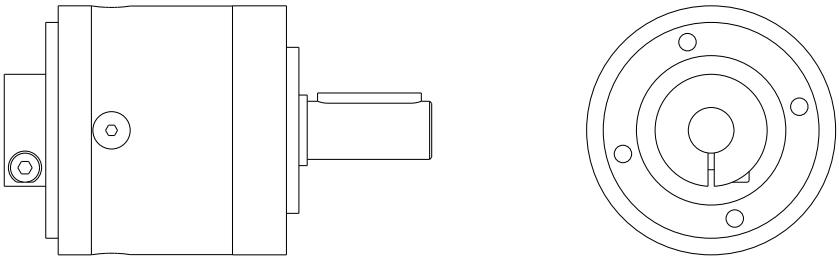

图示为带平键的 PLE060 / 1 级 / 附带平键的输出轴 / 11 mm 锁紧系统 / 无适配电机法兰 – 圆形通用法兰
Drawing corresponds to a PLE060 / 1-stage / output shaft with feather key / 11 mm clamping system / no motor adaptation – round universal flange
所有其它变量可在 www.neugart.com 下 Tec Data Finder 中检索 – All other variants can be retrieved in Tec Data Finder at www.neugart.com

这种输入系统的设计所适用的产品系列，规格尺寸和相关的锁紧系统会在155 -157页的产品编码显示。
相应的参数与尺寸可以从官网www.neugart.com中Tec Data Finder的技术数据表中获取。

This input design applies to the series, frame sizes, and associated clamping systems shown in the product code on pages 155-157.
The respective measurements can be taken from the technical data sheets in Tec Data Finder at www.neugart.com

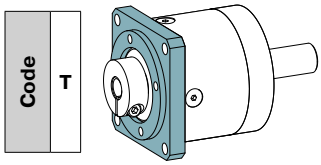

无适配电机法兰 – 方形通用法兰

No motor adaptation – square universal flange

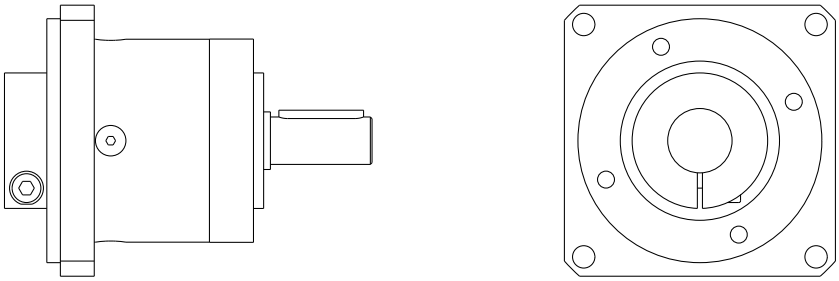

图示为带平键的 PLE060 / 1 级 / 附带平键的输出轴 / 19 mm 锁紧系统 / 无适配电机法兰 – 正方形通用法兰
Drawing corresponds to a PLE060 / 1-stage / output shaft with feather key / 19 mm clamping system / no motor adaptation – square universal flange
所有其它变量可在 www.neugart.com 下 Tec Data Finder 中检索 – All other variants can be retrieved in Tec Data Finder at www.neugart.com

这种输入系统的设计所适用的产品系列，规格尺寸和相关的锁紧系统会在155 -157页的产品编码显示。
相应的参数与尺寸可以从官网www.neugart.com中Tec Data Finder的技术数据表中获取。

This input design applies to the series, frame sizes, and associated clamping systems shown in the product code on pages 155-157.
The respective measurements can be taken from the technical data sheets in Tec Data Finder at www.neugart.com

选项：输入系统规格 Option: Input design

Code	W

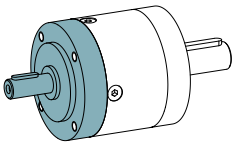

针对 PLE 和 PLQE
For PLE and PLQE

未列出的减速机参数请参见 20 至 29 页中的数据。– 这种减速机必须在输入端和输出端都配有法兰。
Gearbox characteristics not listed here correspond to the details on pages 20 to 29 - The gearboxes have to be flanged on input and output flange

输出轴载荷	Input shaft loads			PLE040	PLE060 / PLQE060	PLE080 / PLQE080	PLE120 / PLQE120	PLE160	p(1)	Code
输入径向力在10.000小时(2)	Radial force input 10,000 h(2)	$F_{r\,input}$	N	100	250	450	1000	1400		W
输入轴向力在10.000小时(2)	Axial force input 10,000 h(2)	$F_{a\,input}$		120	300	500	1300	1600		

转动惯量	Moment of inertia			PLE040	PLE060 / PLQE060	PLE080 / PLQE080	PLE120 / PLQE120	PLE160	p(1)	Code
转动惯量(3)	Mass moment of inertia(3)	J	kgcm²	0,011 - 0,020	0,049 - 0,107	0,269 - 0,587	1,034 - 1,795	2,795 - 8,999	1	W
				0,011 - 0,020	0,050 - 0,092	0,274 - 0,469	1,061 - 1,719	2,627 - 7,565	2	
				0,011 - 0,019	0,048 - 0,057	0,267 - 0,443	1,032 - 1,647	-	3	

输入转速	Input speeds			PLE040	PLE060 / PLQE060	PLE080 / PLQE080	PLE120 / PLQE120	PLE160	p(1)	Code
最高机械输入转速(4)	Max. mechanical input speed(4)	n_{1Limit}	min^{-1}	18000	13000	7000	6500	4500		W

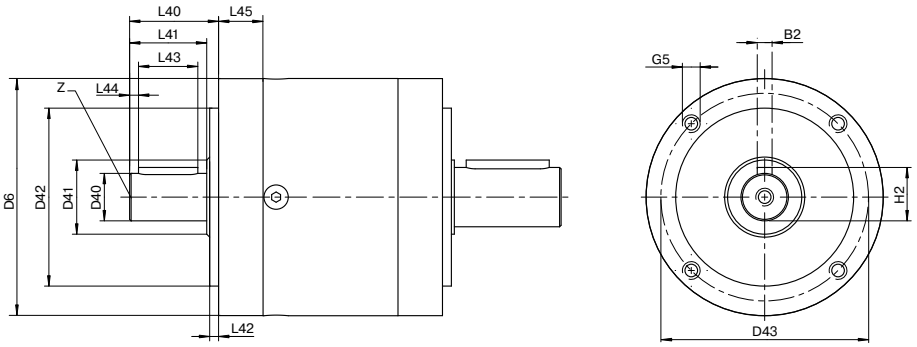

图示为带平键的 PLE080 / 1 级 / 附带平键的输出轴 / 输入轴 – Drawing corresponds to a PLE080 / 1-stage / output shaft with feather key / input shaft
所有其它变量可在 www.neugart.com 下 Tec Data Finder 中检索 – All other variants can be retrieved in Tec Data Finder at www.neugart.com

几何尺寸(5)	Geometry(5)			PLE040	PLE060 / PLQE060	PLE080 / PLQE080	PLE120 / PLQE120	PLE160	p(1)	Code
平键宽度 (DIN 6885-1)	Feather key width (DIN 6885-1)	B2		2	3	5	6	10		W
箱体直径	Housing diameter	D6		40	60	80	115	160		
输入轴直径	Shaft diameter input	D40	j6	8	10	16	20	35		
输入轴轴肩直径	Shaft collar input	D41		12	17	25	35	55		
输入端定位凹槽直径	Centering diameter input	D42	h7	26	40	60	80	110		
输入端安装孔节圆直径	Pitch circle diameter input	D43		34	52	70	100	130		
安装螺纹 x 深度	Mounting thread x depth	G5	4x	M4x6	M5x8	M6x10	M10x16	M10x25		
含平键在内的轴高 (DIN 6885-1)	Shaft height including feather key (DIN 6885-1)	H2		8,8	11,2	18,0	22,5	38,0		
输入轴轴长	Shaft length input	L40		20	28	30	45	65		
到轴肩的距离	Shaft length from shoulder	L41		17	23	26	40	58		
输入端定位凹槽深度	Centering depth input	L42		2	3	3	4	5		
输入端平键长度	Feather key length input	L43		12	18	20	32	45		
输入端至轴端距离	Distance from shaft end input	L44		2,5	2,5	3,0	4,0	7,0		
输入法兰厚度	Flange thickness input	L45		10,2	12,7	15,0	31,0	58,0		
中心孔 (DIN 332, DR 形)	Center hole (DIN 332, type DR)	Z		M3x9	M3x9	M5x12	M6x16	M12x28		

(1) 减速机级数
(2) 沿着轴心且 最小转数 n_1=1000转/分$^{-1}$
(3) 传动比相关的数值可在 Tec Data Finder 中检索 – www.neugart.com
(4) 必须保证允许的工作温度；特殊的输入转速请联系确认
(5) 所有的尺寸单位为mm

(1) Number of stages
(2) Based on center of shaft at n_1=1000 rpm
(3) The ratio-dependent values can be retrieved in Tec Data Finder – www.neugart.com
(4) Allowed operating temperature must be kept; other input speeds available on inquiry
(5) Dimensions in mm

WGN 胀紧套
WGN Shrink disc

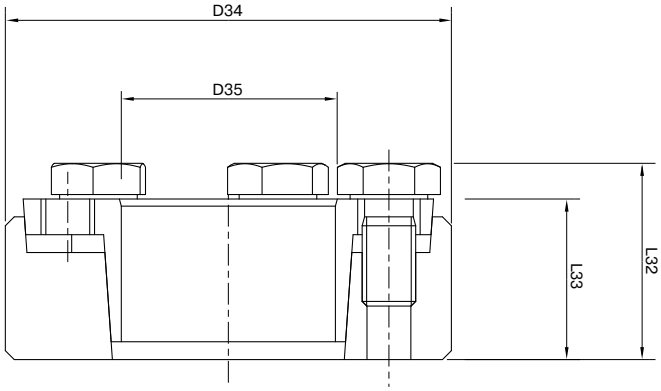

此胀紧套可以通过胀紧力锁紧的方式连接您的设备轴与WGN直角减速机中空输出轴。
This shrink disc can be used to make a force-fit connection between your machine shaft and the right angle hollow shaft gearbox WGN.

				WGN070	WGN090	WGN115	WGN142
产品编号	**Art. No.**			**58365**	**58366**	**58367**	**58368**
外径	Outside diameter	D34	mm	44	50	72	90
内径	Inner diameter	D35		18	24	36	50
总长[1]	Overall length[1]	L32		19	22	27,3	31,3
夹紧长度[1]	Clamp length[1]	L33		15	18	22	26
对边宽度	Width across flats	SW30		10	10	13	13
夹紧螺钉数量	Number of clamp screws	N30		4	5	5	8
转动惯量	Mass moment of inertia	J	$kgcm^2$	0,4251	0,7831	4,212	11,55

建议承载轴公差为 h6，表面粗糙度 Ra < 3,2 µm. CAD数据下载地址：www.neugart.com
For the load shaft, we recommend a tolerance of h6 and a surface roughness of Ra < 3.2 µm. CAD data can be accessed at www.neugart.com

关于胀紧套的安装步骤，请参考相应的安装说明(www.neugart.com)。
For correct installation of the shrink disc, please refer to the corresponding mounting instructions (www.neugart.com)

供货范围
1 x 胀紧套 (含螺钉)

Included parts
1 x Shrink disc (incl. screws)

[1] 未夹紧状态下的尺寸

[1] Dimensions in unclamped state

HLAE 密封套件
HLAE Sealing kit

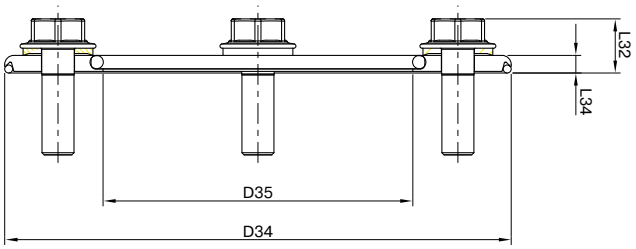

HLAE 配有可自由安装的密封套件可提供最大程度的卫生级保护，并可普遍适用于不同的设备侧面安装厚度。
即为设备提供了最大程度的灵活性，同时又能满足最严格的卫生级别要求。

The freely positionable sealing kit for the HLAE provides maximum hygienic protection, making it universally suitable for different machine side thicknesses.
It therefore gives you maximum flexibility for connecting to the machine while satisfying the strictest hygienic requirements.

				HLAE070	HLAE090	HLAE110
产品编号	**Art. No.**			**63911**	**63858**	**64130**
外径	Outside diameter	D34	mm	75	95	120
内径	Inner diameter	D35		40	58	65
总长	Overall length	L32		8,5	9,5	11,5
垫片长度	Disc length	L34		3	3	3
对边宽度	Width across flats	SW30		8	10	13
数量 x 螺钉 x 长度	Quantity x screw x length	G30		4 x M5x16	4 x M6x20	4 x M8x25

关于密封套件的安装步骤，请参考相应的安装说明(www.neugart.com)。 CAD数据下载地址：www.neugart.com

For correct installation of the sealing kit, please refer to the corresponding mounting instructions (www.neugart.com). CAD data can be accessed at www.neugart.com

供货范围

1 x 不锈钢电解抛光垫片

1 x EPDM 密封圈(针对设备应用的密封件)

1 x EPDM 密封圈(针对减速机的密封件)

4 x USIT-VA 包括带 EPDM 涂层的密封垫片，符合 EHEDG标准

4 x 卫生型设计不锈钢螺钉（电解抛光），符合 EHEDG标准

Included parts

1 x electropolished stainless steel disc

1 x EPDM sealing ring (seal to application)

1 x EPDM sealing ring (seal to gearbox)

4 x USIT-VA with EPDM coated sealing washer, EHEDG-compliant

4 x Hygienic Design stainless steel screw (electropolished), EHEDG-compliant

产品代码 Product code

PSN 090 - 005 - S S S K

系列 Series

PLE	PLE 经济型行星减速机	PLE Economy planetary gearbox
PLQE	PLQE 经济型行星减速机	PLQE Economy planetary gearbox
PLPE	PLPE 经济型行星减速机	PLPE Economy planetary gearbox
PLHE	PLHE 经济型行星减速机	PLHE Economy planetary gearbox
PLFE	PLFE 经济型行星减速机	PLFE Economy planetary gearbox
PFHE	PFHE 经济型行星减速机	PFHE Economy planetary gearbox
WPLE	WPLE 经济型直角减速机	WPLE Economy right angle gearbox
WPLQE	WPLQE 经济型直角减速机	WPLQE Economy right angle gearbox
WPLPE	WPLPE 经济型直角减速机	WPLPE Economy right angle gearbox
WPLFE	WPLFE 经济型直角减速机	WPLFE Economy right angle gearbox
PSBN	PSBN 精密型行星减速机	PSBN Precision planetary gearbox
PSN	PSN 精密型行星减速机	PSN Precision planetary gearbox
PLN	PLN 精密型行星减速机	PLN Precision planetary gearbox
PSFN	PSFN 精密型行星减速机	PSFN Precision planetary gearbox
PLFN	PLFN 精密型行星减速机	PLFN Precision planetary gearbox
WPLN	WPLN 精密型直角减速机	WPLN Precision right angle gearbox
WPSFN	WPSFN 精密型直角减速机	WPSFN Precision right angle gearbox
WGN	WGN 精密型直角减速机	WGN Precision right angle gearbox
HLAE	HLAE 专用行星减速机	HLAE Application specific planetary gearbox
NGV	NGV 专用行星减速机	NGV Application specific planetary gearbox

结构尺寸 Frame size

			PLE	PLQE	PLPE	PLHE	PLFE	PFHE	WPLE	WPLQE	WPLPE	WPLFE	PSBN	PSN	PLN	PSFN	PLFN	WPLN	WPSFN	WGN	HLAE	NGV
040	结构尺寸 Frame size	40	•						•													
050	结构尺寸 Frame size	50			•						•											
060	结构尺寸 Frame size	60	•	•		•			•	•												
064	结构尺寸 Frame size	64					•	•				•				•	•		•			•
070	结构尺寸 Frame size	70			•						•		•	•	•			•		•	•	
080	结构尺寸 Frame size	80	•	•		•			•	•												
090	结构尺寸 Frame size	90			•		•	•			•	•	•	•	•	•	•	•	•	•	•	•
110	结构尺寸 Frame size	110					•	•				•				•	•		•		•	•
115	结构尺寸 Frame size	115											•	•	•			•		•		
120	结构尺寸 Frame size	120	•	•	•	•			•	•	•											
140	结构尺寸 Frame size	140														•	•		•			
142	结构尺寸 Frame size	142											•	•	•			•		•		
155	结构尺寸 Frame size	155			•																	
160	结构尺寸 Frame size	160	•																			
190	结构尺寸 Frame size	190												•	•							
200	结构尺寸 Frame size	200														•	•					

传动比 Ratio

			PLE	PLQE	PLPE	PLHE	PLFE	PFHE	WPLE	WPLQE	WPLPE	WPLFE	PSBN	PSN	PLN	PSFN	PLFN	WPLN	WPSFN	WGN	HLAE	NGV	p[3]
003	传动比 Ratio	i = 3	•	•	•[1]	•	•	•	•	•	•	•	•	•	•						•		1
004	传动比 Ratio	i = 4	•	•	•	•	•	•	•	•	•	•	•	•	•	•	•	•	•	•	•		
005	传动比 Ratio	i = 5	•	•	•	•	•	•	•	•	•	•	•	•	•	•	•	•	•	•	•		
007	传动比 Ratio	i = 7	•[1]	•	•[1]	•	•	•	•	•	•	•	•	•	•	•	•	•	•	•	•		
008	传动比 Ratio	i = 8	•	•	•[1]	•	•	•	•	•	•	•	•		•		•	•	•	•	•		
010	传动比 Ratio	i = 10	•[1]	•	•	•	•	•	•	•	•	•	•	•	•	•	•	•	•	•	•		
009	传动比 Ratio	i = 9	•[1]	•	•[1]	•	•	•	•	•	•	•									•	•	2
012	传动比 Ratio	i = 12	•	•	•[1]	•	•	•	•	•	•	•	•	•	•						•	•	
015	传动比 Ratio	i = 15	•	•	•[1]	•	•	•	•	•	•	•	•	•	•						•	•	
016	传动比 Ratio	i = 16	•	•	•	•	•	•	•	•	•	•	•	•	•	•	•	•	•		•	•	
020	传动比 Ratio	i = 20	•	•	•	•	•	•	•	•	•	•	•	•	•	•	•	•	•		•	•	
025	传动比 Ratio	i = 25	•	•	•	•	•	•	•	•	•	•	•	•	•	•	•	•	•		•	•	
028	传动比 Ratio	i = 28																•	•				
032	传动比 Ratio	i = 32	•	•	•[1]	•	•	•	•	•	•	•			•		•	•	•		•	•	
035	传动比 Ratio	i = 35											•	•		•		•	•				
040	传动比 Ratio	i = 40	•	•	•	•	•	•	•	•	•	•	•	•	•	•	•	•	•		•	•	
050	传动比 Ratio	i = 50			•[2]								•	•		•	•	•	•				
064	传动比 Ratio	i = 64	•	•	•[1]	•	•	•	•	•	•	•			•		•	•			•	•	
070	传动比 Ratio	i = 70											•	•		•			•				
060	传动比 Ratio	i = 60	•[1]	•					•	•													
080	传动比 Ratio	i = 80	•[1]	•					•	•													
100	传动比 Ratio	i = 100	•[1]	•	•	•	•	•	•	•	•	•	•	•	•	•	•	•	•		•		
120	传动比 Ratio	i = 120	•[1]	•					•	•													3
160	传动比 Ratio	i = 160	•[1]	•					•	•													
200	传动比 Ratio	i = 200	•[1]	•					•	•													
256	传动比 Ratio	i = 256	•[1]	•					•	•													
320	传动比 Ratio	i = 320	•[1]	•					•	•													
512	传动比 Ratio	i = 512	•[1]	•					•	•													

参见下一页 See next page

输入端锁紧系统直径 Clamping system diameter input

结构尺寸 Frame size	PLE	PLQE	PLPE	PLHE	PLFE	PFHE	WPLE	WPLQE	WPLPE	WPLFE	PSBN	PSN	PLN	PSFN	PLFN	WPLN	WPSFN	WGN	HLAE	NGV	p[3]			
	40		50				40		50												1/2/3	8 mm	锁紧系统直径 Clamping system diameter	A
	40		50				40		50												1/2/3	9 mm	锁紧系统直径 Clamping system diameter	B
	40 60	60	50 70	60	64	64	60	60	70	64	70 70 90	70 70 90		64 64 90					70	64	1 2/3	11 mm	锁紧系统直径 Clamping system diameter	C
	60	60	70	60	64	64	60	60	70	64	70 90 70 90 115	70 90 70 90 115	70	64 90 64 90 110	64 64 90	70 70 90	64 64 90	70	70	64	1 2/3	14 mm	锁紧系统直径 Clamping system diameter	D
	60 80	60 80	70 90	60 80	64 90	64 90	80	80	90	90	70 90 115 70 90 115	70 90 115 70 90 115 142	70 90	64 90 110 64 90 110 140	64 90 64 90 110	70 90 70 90 115	64 90 64 90 110	70 90	90	64 90	1 2/3	19 mm	锁紧系统直径 Clamping system diameter	E
	80 120	80 120	90 120	80 120	90 110	90 110	120	120	120	110	90 115 115 142	90 115 115 142	90 115	90 110 110 140	90 110 110 140	90 115 115 142	90 110 110 140	90 115	110	90 110	1 2/3	24 mm	锁紧系统直径 Clamping system diameter	F
	120 160	120	120 155	120	110	110					115 142 142	115 142 142 190	115 142	110 140 140 200	110 140 140 200	115 142 142	110 140 140	115 142		110	1 2/3	35 mm	锁紧系统直径 Clamping system diameter	G
			155								142	142 190	142	140 200	140 200	142	140	142			1 2	42 mm	锁紧系统直径 Clamping system diameter	H
												190	190	200	200						1 2	48 mm	锁紧系统直径 Clamping system diameter	K
	•	•																					锁紧系统直径 No clamping system	N

输入系统 Input system

PLE	PLQE	PLPE	PLHE	PLFE	PFHE	WPLE	WPLQE	WPLPE	WPLFE	PSBN	PSN	PLN	PSFN	PLFN	WPLN	WPSFN	WGN	HLAE	NGV		
•	•	•	•	•	•	•	•	•	•	•	•	•	•	•	•	•	•		•	标准输入系统 Standard input system	A
																		•		可安装的驱动系统 Mountable input system	S

输出法兰规格 Output flange design

PLE	PLQE	PLPE	PLHE	PLFE	PFHE	WPLE	WPLQE	WPLPE	WPLFE	PSBN	PSN	PLN	PSFN	PLFN	WPLN	WPSFN	WGN	HLAE	NGV		
•	•	•	•	•	•	•	•	•	•	•	•	•	•	•	•	•	•	•	•	标准输出法兰 Standard output flange	3
												•			•					可兼容 (W)PLS 的输出法兰 Output flange (W)PLS-compatible	4

输出轴规格 Output shaft design

PLE	PLQE	PLPE	PLHE	PLFE	PFHE	WPLE	WPLQE	WPLPE	WPLFE	PSBN	PSN	PLN	PSFN	PLFN	WPLN	WPSFN	WGN	HLAE	NGV	p[3]		
•	•	•	•			•	•	•		•	•	•			•			•		1/2/3	附带平键的输出轴 (DIN 6885-1) Output shaft with feather key (DIN 6885-1)	A
•	•	•	•			•	•	•		•	•	•			•			•		1/2/3	光滑输出轴 Smooth output shaft	B
			•								•	•			•					1/2	花键输出轴 (DIN 5480) Splined output shaft (DIN 5480)	C
					•								•	•		•			•	1 2	法兰输出轴 Flange output shaft	D
				•					•				•	•		•				1 2	带有配合销孔的法兰输出轴 Flange output shaft with dowel hole	E
																	•			1	单侧空心输出轴 Hollow output shaft on one side	F
																	•			1	双侧空心输出轴 Hollow output shaft on both sides	G
																•				1 2	法兰输出轴，配有定位销孔 Flange output hollow shaft with dowel hole	H
			•								•	•			•					1/2	带小齿轮的花键输出轴(DIN 5480) Splined output shaft (DIN 5480) with mounted pinion	K
					•								•	•		•				1/2	装有小齿轮的法兰输出轴 Flange output shaft with mounted pinion	M

表面 Surface

PLE	PLQE	PLPE	PLHE	PLFE	PFHE	WPLE	WPLQE	WPLPE	WPLFE	PSBN	PSN	PLN	PSFN	PLFN	WPLN	WPSFN	WGN	HLAE	NGV		
•	•	•	•	•	•	•	•	•	•	•	•	•	•	•	•	•	•	•	•	标准表面 Standard surface	S

润滑 Lubrication

PLE	PLQE	PLPE	PLHE	PLFE	PFHE	WPLE	WPLQE	WPLPE	WPLFE	PSBN	PSN	PLN	PSFN	PLFN	WPLN	WPSFN	WGN	HLAE	NGV		
•	•	•	•	•	•	•	•	•	•	•	•	•	•	•	•	•	•		•	标准润滑 Standard lubrication	S
•	•	•	•	•	•	•	•	•	•	•	•	•	•	•	•	•	•	•	•	食品级润滑 Food grade lubrication	F
•	•	•	•	•	•	•	•	•	•	•	•	•	•	•					•	低温润滑 Low temperature lubrication	L

回程间隙 Torsional backlash

PLE	PLQE	PLPE	PLHE	PLFE	PFHE	WPLE	WPLQE	WPLPE	WPLFE	PSBN	PSN	PLN	PSFN	PLFN	WPLN	WPSFN	WGN	HLAE	NGV	p[3]		
•	•	•	•	•	•	•	•	•	•	•	•	•	•	•	•	•	•	•	•	1/2/3	标准回程间隙 Standard backlash	S
										•	•	•	•	•						1	降低回程间隙 Reduced backlash	R
															•	•				2		

[1] 无法提供安装尺寸为155或160的减速机 – Not for frame size 155 or 160 [2] 不适用于结构尺寸 50, 70, 90, 120 – Not for frame sizes 50, 70, 90, 120 [3] 减速机级数 – Number of stages

产品代码 Product code

输入系统规格 Input design

		PLE	PLQE	PLPE	PLHE	PLFE	PFHE	WPLE	WPLQE	WPLPE	WPLFE
Z	**适配电机法兰– 2 件式 – 圆形通用法兰** Motor adaptation – 2-part – round universal flange	**60** (11/14) **80** (19) **120** (24)	**60** (11/14) **80** (19) **120** (24)	**70** (11/14) **90** (19) **120** (24)	**60** (11/14) **80** (19) **120** (24)	**64** (11/14) **90** (19) **110** (24)	**64** (11/14) **90** (19) **110** (24)				
Y	**适配电机法兰– 2 件式 – 正方形通用法兰** Motor adaptation – 2-part – square universal flange	**40** (8/9/11) **60** (19) **80** (24) **120** (35) **160** (35)	**60** (19) **80** (24) **120** (35)	**50** (8/9/11) **70** (19) **90** (24) **120** (35) **155** (35/42)	**60** (19) **80** (24) **120** (35)	**64** (19) **90** (24) **110** (35)	**64** (19) **90** (24) **110** (35)	**40** (8/9) **60** (11/14) **80** (19) **120** (24)	**60** (11/14) **80** (19) **120** (24)	**50** (8/9) **70** (11/14) **90** (19) **120** (24)	**64** (11/14) **90** (19) **110** (24)
E	**适配电机法兰 – 单一法兰** Motor adaptation – one part	**40** (8/9) **60** (11/14) **80** (19) **120** (24) **160** (35)	**60** (11/14) **80** (19) **120** (24)	**50** (8/9) **70** (11/14) **90** (19) **120** (24) **155** (35)	**60** (11/14) **80** (19) **120** (24)	**64** (11/14) **90** (19) **110** (24)	**64** (11/14) **90** (19) **110** (24)				
R	**无适配电机法兰 – 圆形通用法兰**[1)] No motor adaptation – round universal flange[1)]	**60** (11/14) **80** (19) **120** (24)	**60** (11/14) **80** (19) **120** (24)	**70** (11/14) **90** (19) **120** (24)	**60** (11/14) **80** (19) **120** (24)	**64** (11/14) **90** (19) **110** (24)	**64** (11/14) **90** (19) **110** (24)				
T	**无适配电机法兰 – 方形通用法兰**[1)] No motor adaptation – square universal flange[1)]	**40** (8/9/11) **60** (19) **80** (24) **120** (35) **160** (35)	**60** (19) **80** (24) **120** (35)	**50** (8/9/11) **70** (19) **90** (24) **120** (35) **155** (35/42)	**60** (19) **80** (24) **120** (35)	**64** (19) **90** (24) **110** (35)	**64** (19) **90** (24) **110** (35)	**40** (8/9)[3] **60** (11/14)[4] **80** (19)[4] **120** (24)[4]	**60** (11/14)[4] **80** (19)[4] **120** (24)[4]	**50** (8/9)[3] **70** (11/14)[4] **90** (19)[4] **120** (24)[4]	**64** (11/14)[4] **90** (19)[4] **110** (24)[4]
W	**无电机适配法兰 – 输入轴**[2)] No motor adaptation – input shaft[2)]	**40** (N) **60** (N) **80** (N) **120** (N) **160** (N)	**60** (N) **80** (N) **120** (N)								

结构尺寸 (锁紧系统直径) **Frame size** (clamping system diameter)

[1)] 产品代码在输入"电机轴直径"后结束 – The product code ends after "motor shaft diameter" has been entered

[2)] 产品代码在该选项之后结束 – The product code ends after this option

[3)] 仅带有通孔的直角齿轮箱 – Angle with through hole only

[4)] 紧带有螺纹孔的直角齿轮箱 – Angle with thread only

电机轴直径 Motor shaft diameter

				8	9	11	14	19	24	35	42	48
4	4 mm	**电机轴直径**	Motor shaft diameter	•								
5	5 mm	**电机轴直径**	Motor shaft diameter	•		•						
6	6 mm	**电机轴直径**	Motor shaft diameter	•		•						
6.35	6,35 mm	**电机轴直径**	Motor shaft diameter	•		•	•					
7	7 mm	**电机轴直径**	Motor shaft diameter		•	•						
8	8 mm	**电机轴直径**	Motor shaft diameter	•		•	•	•				
9	9 mm	**电机轴直径**	Motor shaft diameter		•	•	•	•				
9.5	9,5 mm	**电机轴直径**	Motor shaft diameter			•	•	•				
9.525	9,525 mm	**电机轴直径**	Motor shaft diameter			•	•	•				
10	10 mm	**电机轴直径**	Motor shaft diameter				•	•				
11	11 mm	**电机轴直径**	Motor shaft diameter			•	•	•	•			
12	12 mm	**电机轴直径**	Motor shaft diameter				•	•	•			
12.7	12,7 mm	**电机轴直径**	Motor shaft diameter				•	•	•			
14	14 mm	**电机轴直径**	Motor shaft diameter				•	•	•			
15.875	15,875 mm	**电机轴直径**	Motor shaft diameter					•	•			
16	16 mm	**电机轴直径**	Motor shaft diameter					•	•			
19	19 mm	**电机轴直径**	Motor shaft diameter					•	•	•		
19.05	19,05 mm	**电机轴直径**	Motor shaft diameter						•			
20	20 mm	**电机轴直径**	Motor shaft diameter						•			
22	22 mm	**电机轴直径**	Motor shaft diameter						•	•		
24	24 mm	**电机轴直径**	Motor shaft diameter						•	•		•
28	28 mm	**电机轴直径**	Motor shaft diameter							•		•
32	32 mm	**电机轴直径**	Motor shaft diameter							•		•
35	35 mm	**电机轴直径**	Motor shaft diameter							•		•
38	38 mm	**电机轴直径**	Motor shaft diameter								•	•
42	42 mm	**电机轴直径**	Motor shaft diameter								•	•
48	48 mm	**电机轴直径**	Motor shaft diameter									•

对于"锁紧系统直径" For "clamping system diameter"

最大电机轴长 [mm] Max. motor shaft length [mm]

最大允许的电机轴长 Max. permissible motor shaft length

任意文本 – 长度数据无小数点 Free text – length without decimal places

定位凸台直径 [mm] Centering diameter [mm]

定位凸台直径 Centering diameter

任意文本 – 最多2位小数 Free text – length to max. two decimal places

节圆直径 [mm] Pitch circle diameter [mm]

节圆直径 Pitch circle diameter

任意文本 – 最多1位小数 Free text – length to max. one decimal place

电机法兰类型 Flange type motor

		PLE	PLQE	PLPE	PLHE	PLFE	PFHE	WPLE	WPLQE	WPLPE	WPLFE	PSBN	PSN	PLN	PSFN	PLFN	WPLN	WPSFN	WGN	NGV	HLAE
B5	**B5 电机法兰类型** B5 Flange type motor	•	•	•	•	•	•	•	•	•	•	•	•	•	•	•	•	•	•	•	•
B14	**B14 电机法兰类型** B14 Flange type motor	•	•	•	•	•	•	•	•	•	•	**请联系确认** Available upon inaquiry									•

电机安装螺纹 Mounting thread

M2	M2	**电机安装螺纹**	Mounting thread
M3	M3	**电机安装螺纹**	Mounting thread
M4	M4	**电机安装螺纹**	Mounting thread
M5	M5	**电机安装螺纹**	Mounting thread
M6	M6	**电机安装螺纹**	Mounting thread
M8	M8	**电机安装螺纹**	Mounting thread
M10	M10	**电机安装螺纹**	Mounting thread
M12	M12	**电机安装螺纹**	Mounting thread
M16	M16	**电机安装螺纹**	Mounting thread

PSN090-005-SSSK3AD - Z 11 / 30 / 60 / 75 / B5 / M5 - PK1 - 20 - 18 - S

参见前一页 See previous page

PSBN	PSN	PLN	PSFN	PLFN	WPLN	WPSFN	WGN	HLAE	NGV
70 (11/14/19) **90** (11/14/19/24) **115** (14/19/24/35) **142** (19/24/35/42)	**70** (11/14/19) **90** (11/14/19/24) **115** (14/19/24/35) **142** (19/24/35/42) **190** (35/42/48)	**70** (14/19) **90** (19/24) **115** (24)	**64** (11/14/19) **90** (11/14/19/24) **110** (14/19/24/35) **140** (19/24/35/42) **200** (35/42/48)	**64** (14/19) **90** (14/19/24) **110** (19/24) **140** (24) **200** (48)	**70** (14/19) **90** (14/19/24) **115** (19/24) **142** (24)	**64** (14/19) **90** (14/19/24) **110**(19/24) **140** (24)	**70** (14/19) **90** (19/24) **115** (24)	**70** (11/14) **90** (19) **110** (24)	**64** (11/14) **90** (19) **110** (24)
		115 (35) **142** (35/42) **190** (48)		**110** (35) **140** (35/42) **200** (35/42)	**115** (35) **142** (35/42)	**110** (35) **140** (35/42)	**115** (35) **142** (35/42)		**64** (19) **90** (24) **110** (35)
								70 (11/14) **90** (19) **110** (24)	**64** (11/14) **90** (19) **110** (24)
		70 (14/19) **90** (19/24) **115** (24)		**64** (14/19) **90** (14/19/24) **110** (19/24) **140** (24) **200** (48)	**70** (14/19) **90** (14/19/24) **115** (19/24) **142** (24)	**64** (14/19) **90** (14/19/24) **110** (19/24) **140** (24)	**70** (14/19) **90** (19/24) **115** (24)		**64** (11/14) **90** (19) **110** (24)
		115 (35) **142** (35/42) **190** (48)		**110** (35) **140** (35/42) **200** (35/42)	**115** (35) **142** (35/42)	**110** (35) **140** (35/42)	**115** (35) **142** (35/42)		**64** (19) **90** (24) **110** (35)

Z 输入系统规格 Input design

11 电机轴直径 Motor shaft diameter

30 最大电机轴长 [mm] Max. motor shaft length [mm]

60 定位凸台直径 [mm] Centering diameter [mm]

75 节圆直径 [mm] Pitch circle diameter [mm]

B5 电机法兰类型 Flange type motor

M5 电机安装螺纹 Mounting thread

PK1 小齿轮型号 Pinion type

20 模数 Module

18 齿数 Number of teeth

S 螺齿轮类型 Helix angle

PK1	PM1	齿轮类型 Helix angle	
•		直齿齿轮 Spur Pinion	**L**
•	•	斜齿齿轮 Helical pinion	**S**

齿数 Number of teeth

可用的齿数以及组合方式，详见第142页和第144页

Available number of teeth and possible combinations see pages 142 and 144

	模数	Module
20	模数 2	Module 2
30	模数 3	Module 3
40	模数 4	Module 4
50	模数 5	Module 5

的组合方式，详见第142页和第144页

Detailed possible combinations see pages 142 and 144

PLE	PLQE	PLPE	PLHE	PLFE	PFHE	WPLE	WPLQE	WPLPE	WPLFE	PSBN	PSN	PLN	PSFN	PLFN	WPLN	WPSFN	WGN	HLAE	NGV	小齿轮型号 Pinion type	
			•								•	•			•					花键输出轴的小齿轮 Pinion for splined output shaft	**PK1**
					•								•	•		•				法兰输出轴的小齿轮 Pinion for flange output shaft	**PM1**

最大可传递输出转矩

最大的可传递输出扭矩
计算减速机齿部的使用寿命时，需区分
疲劳强度和持久强度。参见图表

疲劳强度
所有 Neugart 公司的行星齿轮减速机都是专为高耐久性的使用条件而设计的（在规定的额定扭矩 T_{2N} 之内）。
可随时达到指定的负载数据，减速机齿部不会出现故障。

持久强度
基于指定的额定扭矩 T_{2N}，进行断续运行时，还可以传输短时间的扭矩峰值或过高的使用扭矩。

最大使用扭矩 $T_{2使用}$ 的计算

* 出现过高的使用扭矩时确定“输出轴转数”的总和。
* 通过图表得出最大增强系数 f。
* 可算出最大可传输的使用扭矩 $T_{2max\_允许\_使用}$

$$T_{2max\_允许\_使用} = f \times T_{2N}$$

* 最大使用扭矩 $T_{2使用}$ 不得超过已得出的变速器最大输出扭矩 $T_{2max\_允许\_使用}$。

$$T_{2max\_允许\_使用} \geq T_{2使用}$$

增强系数 **f** 取决于“输出轴转数”的总和

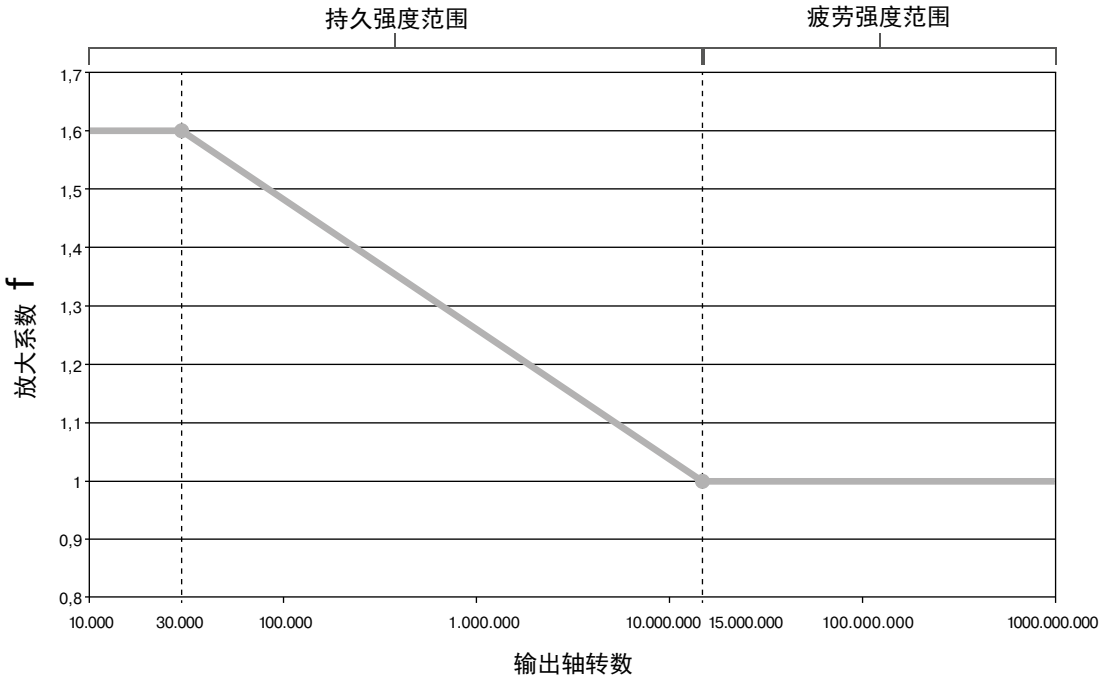

环境条件

用于散热设计的以下环境条件是设置目录值的基础：

* 电机不加热减速机
* 凸缘板（使用侧）：
  - 方形的平板 = 2 x 减速机输出端法兰外方尺寸
  - 材料：钢
* 机座上的板连接：单侧 20°C
* 不妨碍减速机的对流
* 环境温度： 20°C

利用 NCP 针对应用进行专门设计 – www.neugart.com

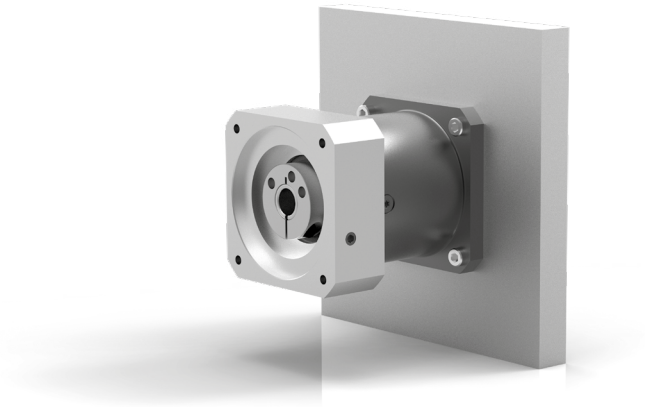

Max. transferable output torque
Calculations of gear teeth service lives differentiate between long life and finite life. See diagram.

Long life
All Neugart planetary gearboxes are designed for the long life range within the specified nominal torques T_{2N}.
The load specifications can be reached any number of times without the gear teeth failing.

Finite life
Intermittent duty may transfer brief torque peaks or increased application factors that exceed the specified nominal torque T_{2N}.

Calculating the max application torque $T_{2application}$

* The total output shaft rotations under the increased application torques are determined.
* The resulting max increase factor f can be determined from the diagram.
* The max transferable application torque $T_{2max\_application}$ is calculated:

$$T_{2max\_application} = f \times T_{2N}$$

* The application torque $T_{2application}$ may not exceed the gearbox's calculated max application torque $T_{2max\_application}$

$$T_{2max\_application} \geq T_{2application}$$

Increase factor f as a function of the total "output shaft rotations"

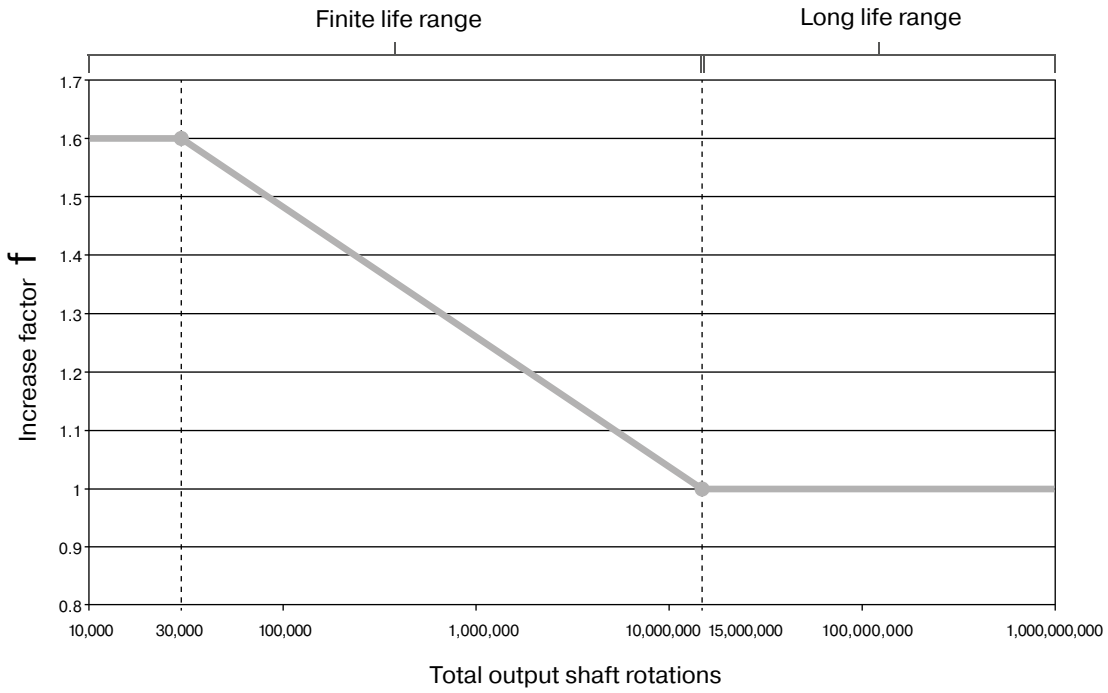

Ambient conditions

The following ambient conditions for the thermal design serve as the basis for the catalog values:

* The motor does not heat up the gearbox
* Flange mounted plate (application side):
  - Square plate = 2 x gearbox flange cross section at output
  - Material: steel
* Plate connected via machine bed: 20°C on one side
* No hindrance to gearbox convection
* Ambient temperature: 20°C

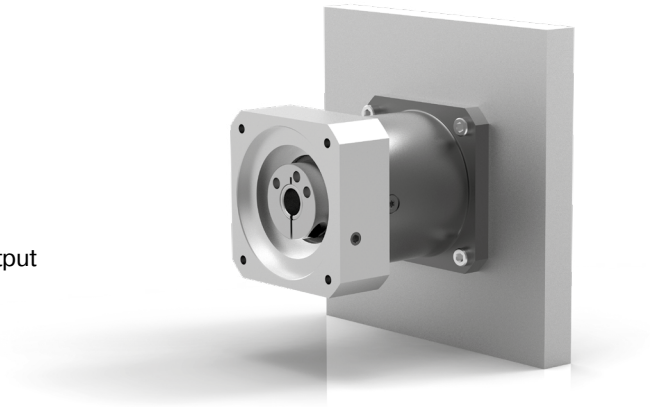

Application specific configuration with NCP – www.neugart.com

集团总部
Group Headquarters
Neugart GmbH
Keltenstraße 16
77971 Kippenheim
Phone: +49 7825 847-0
Fax: +49 7825 847-2999
Email: sales@neugart.com
Web: www.neugart.com

美国总分销公司
USA Headquarters
Neugart USA Corp.
14325 South Lakes Drive
Charlotte, NC 28273
Phone: +1 980 299-9800
Fax: +1 980 299-9799
Email: sales@neugartusa.com
Web: www.neugart.com/en-us

中国分公司
China Headquarters
Neugart Planetary Gearboxes (Shenyang) Co., Ltd.
No.152-1, 22nd road
E&T Development Zone Shenyang,
PC 110143
Phone: +86 24 2537-4959
Fax: +86 24 2537-2552
Email: sales@neugart.net.cn
Web: www.neugart.net.cn

意大利总部
Italy Headquarters
Neugart Italia S.r.l.
Corso Matteotti 30
10121 Torino
Phone: +39 011 640 8248
Fax: +39 011 640 6205
Email: commerciale@neugart.it
Web: www.neugart.com/it-it

法国总部
France Headquarters
Neugart France S.A.S.
28 rue Schweighaeuser
67000 Strasbourg
Phone: +33 3 30 67 35 59
Fax: +49 7825 847-2999
Email: sales@neugart.fr
Web: www.neugart.com/fr-fr

土耳其总部
Turkey Headquarters
Neugart Redüktör San. Tic. Ltd. Şti
Burhaniye Mah. Atilla Sk. No:12
34676 Beylerbeyi – Üsküdar / İstanbul
Phone: +90 216 639 4050
Fax: +90 216 639 4052
Email: sales@neugart.com.tr
Web: www.neugart.com/tr-tr

巴西总部
Brazil Headquarters
Neugart do Brasil
Equipamentos Industriais Ltda
Acesso José Sartorelli,
km 2,1 - Prédio 1 Ala B,
Parque das Árvores
SP CEP 18555-225 Boituva
Phone: +55 15 3363-9910
Fax: +55 15 3363-9911
Email: comercial@neugart.com.br
Web: www.neugart.com/pt-br

德国
Germany Baden-Wuerttemberg
B & K Antriebstechnik GmbH
Anhauser Str. 76
89547 Gerstetten-Dettingen
Phone: +49 7324 91012-0
Fax: +49 7324 91012-25
Email: info@b-k-antriebstechnik.de
Web: www.b-k-antriebstechnik.de

德国
Germany Bavaria
Helmut Schwarz
85241 Hebertshausen
Phone: +49 171 7587709
Email: helmut.schwarz@neugart.com
Web: www.neugart.com/de-de

德国
Germany Bavaria
Karl-Heinz Sippel
97074 Würzburg
Phone: +49 171 8812757
Email: karl-heinz.sippel@neugart.com
Web: www.neugart.com/de-de

德国中部/德国西部
Central Germany/Western Germany
Hans-Jürgen Becker
63739 Aschaffenburg
Phone: +49 151 18812750
Email: hans-juergen.becker@neugart.com
Web: www.neugart.com/de-de

德国北部/德国西部
Northern Germany/Western Germany
Marco Stührenberg
32758 Detmold
Phone: +49 151 18812751
Email: marco.stuehrenberg@neugart.com
Web: www.neugart.com/de-de

德国东部
Eastern Germany
Sebastian Gruner
09224 Chemnitz
Phone: +49 151 18817647
Email: sebastian.gruner@neugart.com
Web: www.neugart.com/de-de

奥地利/**Austria**
TAT TECHNOM Antriebstechnik GmbH
Technologiering 13 - 17
4060 Leonding
Phone: +43 7229 64840-0
Fax: +43 7229 64840-99
Email: tat@tat.at
Web: www.tat.at

比利时/**Belgium**
Automotion
Bilksken 36
9920 Lovendegem
Phone: +32 93 705555
Fax: +32 93 705550
Email: info@automotion.be
Web: www.automotion.be

捷克/**Czech Republic**
TAT – POHONOVÁ TECHNIKA s.r.o.
370 06 České Budějovice
Hraniční 2253
Phone: +420 387 414-414
Fax: +420 387 414-415
Email: tat@cz.tat.at
Web: www.tat.cz

丹麦/**Denmark**
ServoTech A/S
Ulvehavevej 44B
7100 Vejle
Phone: +45 7942 80 80
Email: sales@servotech.dk
Web: www.servotech.dk

芬兰/**Finland**
Oy Movetec Ab
Suokalliontie 9
01740 Vantaa
Phone: +358 9 5259-230
Fax: +358 9 5259-2333
Email: info@movetec.fi
Web: www.movetec.fi

法国/**France**
Neugart France S.A.S.
28 rue Schweighaeuser
67000 Strasbourg
Phone: +33 3 30 67 35 59
Fax: +49 7825 847-2999
Email: sales@neugart.fr
Web: www.neugart.com/fr-fr

希腊/**Greece**
KYMA Automation
Mesaio 54500
Thessaloniki
Phone: +30 2310 786002
Fax: +30 2310 011812
Email: info@kyma-automation.gr
Web: www.kyma-automation.gr

意大利/**Italy**
Neugart Italia S.r.l.
Corso Matteotti 30
10121 Torino
Phone: +39 011 640 8248
Fax: +39 011 640 6205
Email: commerciale@neugart.it
Web: www.neugart.com/it-it

意大利/**Italy**
Bianchi Industrial Spa
Via G. Zuretti 100
20125 Milano
Phone: +39 02 678 61
Fax: +39 02 670 1062
Email: info@bianchiindustrial.it
Web: www.bianchi-industrial.it

荷兰/**Netherlands**
Caldic Techniek B.V.
Schuttevaerweg 60
3044 BB Rotterdam
Phone: +31 104 156622
Fax: +31 104 378810
Email: info@caldic-techniek.nl
Web: www.caldic.com

荷兰/**Netherlands**
ABI b.v.
Minckelersweg 22
2031 EM Haarlem
Phone: +31 23 531 9292
Fax: +31 23 532 6599
Email: info@abi.nl
Web: www.abi.nl

挪威/**Norway**
Aratron AS
Bjørnerudveien 17
1266 Oslo
Phone: +47 23 19 1660
Fax: +47 23 19 1661
Email: firmapost@aratron.no
Web: www.aratron.no

NEUGART

波兰/**Poland**
P.P.H. WObit E.K.J. Ober s.c.
Dęborzyce 16
62-045 Pniewy
Phone: +48 61 2227-410
Fax: +48 61 2227-439
Email: wobit@wobit.com.pl
Web: www.wobit.com.pl

西班牙/**Spain**
Brotomatic, S.L.
C/San Miguel de Acha, 2-Pab. 3
01010 Vitoria-Gasteiz (Álava)
Phone: +34 945 249411, 249776
Fax: +34 945 227832
Email: broto@brotomatic.es
Web: www.brotomatic.es

瑞典/**Sweden**
SDT Scandinavian Drive Technologies
Sabelgatan 4
254 67 Helsingborg
Phone: +46 42 380800
Fax: +46 42 380813
Email: info@sdt.se
Web: www.sdt.se

瑞士/**Switzerland**
Relex AG
Wilenstrasse 43
8832 Wilen
Phone: +41 55 2254611
Fax: +41 55 2254619
Email: info@relex.ch
Web: www.relex.ch

英国/**United Kingdom**
HMK Automation Group Ltd
Kappa House, Hatter Street
Congleton
Cheshire CW12 1QJ
Phone: +44 1260 279411
Fax: +44 1260 281022
Email: sales@hmkdirect.com
Web: www.hmkdirect.com

土耳其/**Turkey**
Neugart Redüktör San. Tic. Ltd. Şti
Burhaniye Mah. Atilla Sk. No:12
34676 Beylerbeyi – Üsküdar / İstanbul
Phone: +90 216 639 4050
Fax: +90 216 639 4052
Email: sales@neugart.com.tr
Web: www.neugart.com/tr-tr

巴西/阿根廷 **Brazil/Argentina**
Neugart do Brasil
Equipamentos Industriais Ltda
Acesso José Sartorelli,
km 2,1 - Prédio 1 Ala B,
Parque das Árvores
SP CEP 18555-225 Boituva
Phone: +55 15 3363-9910
Fax: +55 15 3363-9911
Email: comercial@neugart.com.br
Web: www.neugart.com/pt-br

中国分公司/**China**
Neugart Planetary Gearboxes (Shenyang) Co., Ltd.
No.152-1, 22nd road
E&T Development Zone Shenyang,
PC 110143
Phone: +86 24 2537-4959
Fax: +86 24 2537-2552
Email: sales@neugart.net.cn
Web: www.neugart.net.cn

印度/**India**
Fluro Engineering PVT. Ltd.
Plot No.B-29/1, MIDC,
Taloja, Dist. Raigad,
Navi Mumbai - 410208
Maharashtra
Phone: +91 22 2741-1922, 2740-1153
Fax: +91 22 2741-1933
Email: sales@fluroengg.com
Web: www.fluroengg.com

以色列/**Israel**
SUZIN TRANSMISSION SYSTEM LTD.
4 Hapeles St., Bldg. 11
Gav-Yam ind. Park
Haifa
Phone: +972 4 8724148, 8725708
Fax: +972 4 8414284
Email: info@suzin.co.il
Web: www.suzin.co.il

马来西亚/**Malaysia**
Aims Motion Technology Sdn. Bhd.
No.19 Jalan Industri PBP8,
Taman Industri Pusat Bandar Puchong,
47100 Puchong Selangor
Phone: +6 03 5882-1896
Fax: +6 03 5882-1845
Email: shchng@aimsmotion.com.my
Web: www.aimsmotion.com.my

韩国/**South Korea**
Intech Automation Inc.
2-1504, Ace Hitech City
55-20 Mullae-Dong 3-Ga,
Youngdeungpo-Ku, Seoul, 50-972
Phone: +82 2 3439-0070
Fax: +82 2 3439-0080
Email: intech@intechautomation.co.kr
Web: www.intechautomation.co.kr

土耳其/**Turkey**
Neugart Redüktör San. Tic. Ltd. Şti
Burhaniye Mah. Atilla Sk. No:12
34676 Beylerbeyi – Üsküdar / İstanbul
Phone: +90 216 639 4050
Fax: +90 216 639 4052
Email: sales@neugart.com.tr
Web: www.neugart.com/tr-tr

供您记录 For your notes

类别 Category

E 经济型
Economy Line

用实惠的价格达到令人满意的精确度。
经济实惠且性价比超高的减速机系列。这一经济实惠的产品系列具备较高的精确度，回程间隙可达6弧分，功率高。这一系列产品有多种型号，可以根据具体情况灵活地调整。

Precision at an attractive price.
The economical gearbox model series with an outstanding price/performance ratio. The Economy model series impresses with high precision of up to 6 arcmin of torsional backlash and a high performance density, a wide range of variants and numerous adaptation options.

P 精密型
Precision Line

精密型 适合于所有追求精确度的客户。
回程间隙从 3 弧分到 1 弧分（可选），可以达到最高的精确度。特殊的轴承与密封技术，以及笼状结构的行星齿轮架，使得 精密型 的功率再上一层楼。低震动、高性能的装有准双曲面齿的直角型减速机使得这一产品系列得到完善。

The Precision Line is suitable for anyone who wants precision.The standard torsional backlash of 3 arcmin and optionally 1 arcmin provides maximum precision for the application. Special bearing and gasket technologies and cage-type planetary carriers increase the performance of the Precision Line. The model series is completed by special low-vibration and high-performance right angle gearboxes with hypoid teeth.

A 针对特定应用的减速机
Application-specific gearbox

根据特定应用的要求，我们对这些减速机做出了优化。
因此，卫生型设计减速机 HLAE 能够满足食品与药品领域极为敏感的要求。
如果用在工业地面运输车上， NGV 高精度减速器的智能设计，采用合适的轮子，同时提供了具备附加值的解决方案。

These gearboxes are optimized for application-specific requirements.
Hygienic Design gearboxes meet the sensitive requirements in the food and pharmaceutical sectors. For use in industrial fork lift trucks, the clever concept of the NGV planetary gearbox with matching wheel offers a solution with added value.

传输方向 Transmission direction

同轴减速机
Coaxial gearbox

驱动轴与输出轴位于一条线上。

The input and the output shafts are in a straight line.

直角型减速机
Right angle gearbox

驱动轴与输出轴互为 90°。

The input shaft and the output shaft are offset from each other by 90°.

旋转方向 Rotation direction

旋转方向 同方向
Equidirectional rotation

驱动轴与输出轴的旋转方向相同。

The input and the output shaft rotate in the same direction.

旋转方向 反方向
Counterdirectional rotation

驱动轴与输出轴的旋转方向相反。

The drive shaft and the output shaft rotate in opposite directions.

齿轮 Gearing

直齿
Spur gear

采用直齿设计，传输的转矩达到最高。因此，减速机的功率显著地提升。

Maximum torques can be transmitted with straight teeth. This significantly increases the performance density of the gearbox.

斜齿
Helical gear

斜齿减少了运行时的噪音。振动被降至最低程度。如此一来，在加工机床应用中，可以提高表面质量。

Helical teeth reduce the amount of operating noise. Vibration is reduced to a minimum. The surface quality is therefore increased when used in processing machines.

齿轮 Gearing

锥齿轮 直角箱
Bevel gear right angle stage

带有直齿的锥齿轮组的直角箱：使用 1:1 的传动比。这一直角箱技术将较少的结构空间与较高的性能结合在一起。两条轴在一个平面上移动，从而避免了轴向偏差。

A bevel gear set with straight gearing and a 1:1 transmission ratio is used for the angle step. This angle step technology combines a low installation space requirement with high performance capability. The two axes operate on one level, i.e. without an axis offset.

准双曲面齿轮 直角箱
Hypoid gear right angle stage

这一直角型减速机凭借准双曲面齿，可以均匀而低震动地运行。这种齿轮类型的另一优势是噪音较低。两条轴相互偏离，也就是位于不同的平面内。

Because of its hypoid teeth, this right angle gearbox operates smoothly and with little vibration. Another advantage of this type of gearing is low noise generation. Both axes are offset to each other, i.e. they are on different levels.

输出法兰 Output flange

圆形输出法兰
Round type output flange

标准接口，可以简单地装配。机身内不需要螺纹孔或者锁紧螺母。减速机上有螺纹孔，可以用四枚螺钉直接固定。

The standard interface for uncomplicated, easy assembly. A threaded hole in the machine unit or countering with threaded nuts is not required. The gearbox is directly attached to the threaded holes in the gearbox at the application side with four screws.

正方形输出法兰
Square type output flange

通过正方形的输出法兰，可以将减速机直接紧固在机器上，不需要其它的中间法兰。输出法兰带有贯通孔，可以简单而牢固地安装，并且易于接近。

Because of the square output flange, the gearbox can be screwed directly to the machine without an intermediate flange. The output flange with through holes makes simple but secure installation and universal accessibility possible.

圆形特大号输出法兰
Extra large round type output flange

安装法兰尺寸较大，带有8至12个安装孔，可以传输出最高的转矩。

The large installation flange with 8 or 12 screw-on holes makes the transmission of extremely high torques possible.

轴承 Bearing

低摩擦深沟球轴承
Low-friction deep groove ball bearings

轴承的结构摩擦程度较低，因此减速机能够适应高转速。这种轴承产生的热量低，能够适应长期高转速运作，性能不受影响。

Thanks to the low-friction bearing concept, the gearbox is optimally designed for fast rotation speeds. The low heat development of this bearing makes permanently fast rotation speeds possible without affecting performance.

增强深沟球轴承
Reinforced deep groove ball bearings

特大号的深沟球轴承可以承受较高的径向力与轴向力。驱动元件可以直接安装在输出轴上，不需要额外的支撑组件。

Extra-large deep groove ball bearings make it possible to absorb high levels of radial and axial force. The drive elements can be fitted directly to the output shaft without additional bearing components.

配有预紧的圆锥滚子轴承
Preloaded tapered roller bearings

逐对配有预紧的刚性圆锥滚子可以长久地保障刚性。即使运行方向不断变化，输出轴承也不会出现背隙。

Tapered roller bearings that are pre-stressed in pairs provide additional, permanent rigidity. Even with variable operating directions, the output bearings remain exact.

配有预紧的角接触滚子轴承
Preloaded angular contact roller bearings

逐对摆放的角接触滚子轴承直径较大，可以允许极高的径向力与轴向力。此外，减速机的倾斜扭矩得到大幅提高。装有角接触滚子轴承的减速机尤其适合转向台或者齿轮/齿杆应用。

Inclined roller bearings arranged in pairs with a large diameter make maximum radial and axial force possible. The tilting moment of the gearbox also increases to a considerable extent. Gearboxes equipped with inclined roller bearings are ideal for rotary tables or rack and pinion applications.

密封件Seals

径向轴密封
Rotary shaft seal

Neugart 设计的密封件带有预拉紧的径向轴密封，防灰尘，防喷淋水。防护级别达到 IP 65 。

The pre-tensioned radial shaft seal designed by Neugart resists dust and jets of water achieving an IP65 protection class.

可选：FFKM 密封件
Option: FFKM seal

针对耐化学腐蚀、耐高温的要求，也可以选用 FFKM 密封件。

An FFKM seal can optionally be used for greater resistance to chemicals and heat.

其它 Others

可选：
降低回程间隙
Option: Reduced backlash

为了达到最高的精确度，可以选择<1弧分的同轴减速机；或者选择<3弧分的直角型减速机

Reduced backlash with < 1 arcmin for coaxial gearboxes, or < 3 arcmin for right angle gearboxes can be optionally selected for maximum accuracy.

可选：
花键输出轴 (DIN 5480)
Option: Splined output shaft (DIN 5480)

您也可以选用符合 DIN 5480 标准的花键输出轴。

A splined output shaft in accordance with DIN 5480 can be optionally used.

可选：
装有小齿轮的高精度减速机
Option: Planetary gearbox with mounted pinion

高精度减速机与斜齿或直齿齿轮组合，可以直接安装在您的齿轮-齿条系统里。

The planetary gearboxes are combined with helical-cut or straight-cut pinions, and can be installed directly into your rack-and-pinion application.

多样的传动比（i=3 至 i=512)
High ratio variety

针对Neugart减速机，可选择的传动比种类尤其多。选择范围从 i=3 到 i=512 。

These gearboxes have an extremely wide range of different transmission ratios ranging from i=3 to i=512.

输出端带有超长定心环
Extra long centering collar

超长的定心环，使得输出轴承更符合应用的要求，并改善径向力的支撑，无需增加轴向组装空间。

The long centering collar moves the output bearing closer to the application and thus improves the support of the radial forces without increasing the axial installation space.

法兰输出轴 (按 ISO 9409 标准)
Flange output shaft ISO 9409

符合 ISO 9409 标准的法兰接口确保驱动组件、带盘、直线运行单元或模具库可以简易快速地安装。这种减速机的抗扭刚度比采用一般传动轴的型号高出数倍。整合了定位销孔，在安装时确保牢固可靠。您也可以选择没有定位销孔的型号，而是增加一个螺纹。

The standardized flange interface in accordance with ISO 9409 guarantees of quick and easy installation of drive components such as belt pulleys, linear units and turntables. The torsional stiffness of this gearbox is several times greater than those versions with normal output shafts. The integrated dowel pin drill hole provides additional stability during installation. The gearbox is also optionally available without a dowel pin drill hole, but comes with with a different thread instead.

行星齿轮架
Planet carrier in disc design

片状结构的行星齿轮架在一侧支撑行星。这种行星齿轮架降低了减速机的转动惯量，从而显著地提高了动态。

The planets are supported at one side in the disk version of the planetary carrier. With this planetary carrier design, the mass inertia of the gearbox is reduced and the dynamics are therefore significantly increased.

行星齿轮架（笼状结构)
Planet carrier in cage design

笼状结构的行星齿轮架提升了减速机的抗扭刚度，因为两侧的行星都得到支撑。减速机的抗扭刚度更高，定位更为精确。可传输的转矩也增加了。

The cage design of the planetary carrier increases the torsional stiffness of the gearbox considerably, since the planets are supported at both sides. The gearbox becomes more torsionally rigid with much more accurate positioning. Greater torque can also be transmitted.

空心轴
Hollow shaft

1级减速机的空心轴可以灵活地穿过电缆。

A hollow shaft with 1-stage gearboxes allows flexible line leadthrough towards the application.

夹紧系统的空心轴，带有胀紧套
Hollow shaft for clamping system with shrink disc

凭借空心轴，可以将带有胀紧套的夹紧系统连接到机床轴。可以从两侧夹紧，并且穿过电线。

A hollow shaft makes it possible to use a clamping system with a shrink disc for force-fitting connection of the machine shaft. Clamping at both sides is possible, and lines can also be led through.

技术特性说明 Explanation of technical features

经济型
Economy Line

用实惠的价格达到令人满意的精确度。
经济实惠且性价比超高的减速机系列。这一经济实惠的产品系列具备较高的精确度，回程间隙可达6弧分，功率高。这一系列产品有多种型号，可以根据具体情况灵活地调整。

Precision at an attractive price.
The economical gearbox model series with an outstanding price/performance ratio. The Economy model series impresses with high precision of up to 6 arcmin of torsional backlash and a high performance density, a wide range of variants and numerous adaptation options.

精密型
Precision Line

精密型 适合于所有追求精确度的客户。
回程间隙从 3 弧分到 1 弧分（可选），可以达到最高的精确度。特殊的轴承与密封技术，以及笼状结构的行星齿轮架，使得 精密型 的功率再上一层楼。低震动、高性能的装有准双曲面齿的直角型减速机使得这一产品系列得到完善。

The Precision Line is suitable for anyone who wants precision.The standard torsional backlash of 3 arcmin and optionally 1 arcmin provides maximum precision for the application. Special bearing and gasket technologies and cage-type planetary carriers increase the performance of the Precision Line. The model series is completed by special low-vibration and high-performance right angle gearboxes with hypoid teeth.

针对特定应用的减速机
Application-specific gearbox

根据特定应用的要求，我们对这些减速机做出了优化。
因此，卫生型设计减速机 HLAE 能够满足食品与药品领域极为敏感的要求。
如果用在工业地面运输车上， NGV 高精度减速器的智能设计，采用合适的轮子，同时提供了具备附加值的解决方案。

These gearboxes are optimized for a[illegible]ic requirements.
Hygienic Design gearboxes meet the sensitive requirements in the food and pharmaceutical sectors. For use in in[illegible]ever [illegible] of the NGV planetary gearbox with matching wheel offers a solution with added value.

导航帮助:
在接下来的页面中，您将看到我们减速机的详细说明。

Navigation aid:
On the following pages you will find detailed explanations of the technical features of our gearboxes.

传输方向 Transmission direction

同轴减速机
Coaxial gearbox

驱动轴与输出轴位于一条线上。

The input and the output shafts are in a straight line.

直角型减速机
Right angle gearbox

驱动轴与输出轴互为 90°。

The input shaft and the output shaft are offset from each other by 90°.

旋转方向 Rotation direction

旋转方向 同方向
Equidirectional rotation

驱动轴与输出轴的旋转方向相同。

The input and the output shaft rotate in the same direction.

旋转方向 反方向
Counterdirectional rotation

驱动轴与输出轴的旋转方向相反。

The drive shaft and the output shaft rotate in opposite directions.

齿轮 Gearing

直齿
Spur gear

采用直齿设计，传输的转矩达到最高。因此，减速机的功率显著地提升。

Maximum torques can be transmitted with straight teeth. This significantly increases the performance density of the gearbox.

斜齿
Helical gear

斜齿减少了运行时的噪音。振动被降至最低程度。如此一来，在加工机床应用中，可以提高表面质量。

Helical teeth reduce the amount of operating noise. Vibration is reduced to a minimum. The surface quality is therefore increased when used in processing machines.

供您记录 For your notes

常州库克传动科技有限公司
技术服务专线：189-1589-6797
Technical Service Line www.czkuke.com

Neugart GmbH
Keltenstraße 16
77971 Kippenheim
Deutschland
Phone: +49 7825 847-0
Fax: +49 7825 847-2999
Email: sales@neugart.com
Web: www.neugart.com

Neugart USA Corp.
14325 South Lakes Drive
Charlotte, NC 28273
USA
Phone: +1 980 299-9800
Fax: +1 980 299-9799
Email: sales@neugartusa.com
Web: www.neugart.com/en-us

100324356 减速机样本 08.2021 · 版本
100324356 Complete gearbox catalog 08.2021 · Subject to modifications